Modular Cooperative Mobile Robots for Ventral Long Payload Transport and Obstacle Crossing

Mohamed.KRID@ifma.fr
Jean-Christophe.FAUROUX@ifma.fr
Belhassen-Chedli.BOUZGARROU@ifma.fr

Projet co-financé par l'Union européenne
L'Europe s'engage en Auvergne avec le Fonds européen de développement régional (FEDER)

Introduction to the C³Bots project

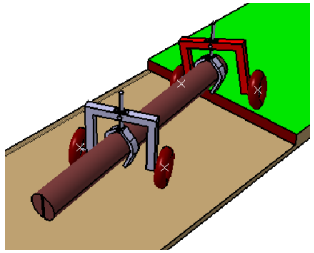

C³Bots =
Collaborative
Cross &
Carry
Mobile RoBots

- C³Bots
  - Introduction
  - Devices
  - OpenWHEEL
- Kinematics
- Locomotion
- Conclusion

General goal

C³Bots = **Collaborative Cross & Carry** Mobile RoBots

- ✔ **Modularity**: Several **mono-robots** that combine into a single **poly-robot**
- ✔ **Reconfigurability**

- ✔ Unstructured environments
- ✔ **Obstacle** crossing
- ✔ **Stability**

- ✔ Manipulation and **transport**
- ✔ Payloads of **any mass & shape**
- ✔ Removal man task

Scientific topics

- Design of a mechatronic system achieving the tasks with **minimal DoF** (→ simplicity)
- Static and dynamic models to maximize the poly-robot **margin of stability**
- **Perception** and **control** to guaranty efficient **connections** mono-robot/mono-robot and poly-robot/payload
- Optimal **reconfiguration** of the mono-robots for the task (number, poses, cooperation strategies)

The C³Bots project – Examples of tasks

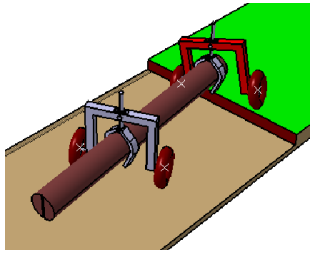

C³Bots = Collaborative Cross & Carry Mobile RoBots

- C³Bots
  - Introduction
  - Devices
  - OpenWHEEL
- Kinematics
- Locomotion
- Conclusion

Object transport on smooth ground

Obstacle crossing with heavy payload

Co-manipulation and transport with two operators

Bio-inspired co-manipulation

Object transport with several operators

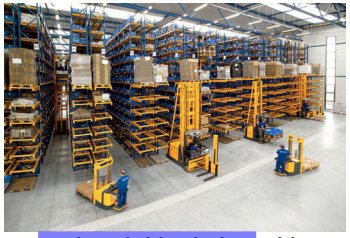

Industrial logistics with several carts on flat ground

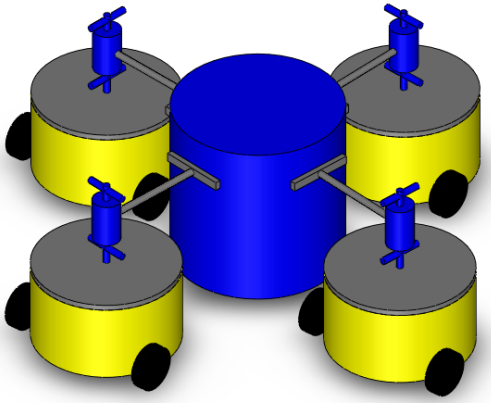

The **C³BOTS poly-robot**
Collaborative **C**ross and **C**arry mobile ro**BOTS**

Co-manipulation of a heavy payload on flat ground

Co-manipulation of a heavy payload with obstacle crossing

Collaborative
Cross
Carry
Long objects

Co-transport of stretchers on irregular ground

Co-transport of a rigid long object on a flat ground

Co-manipulation of compliant bars on a flat but unstructured environment (building area)

Krid / Fauroux / Bouzgarrou
IFMA / Institut Pascal

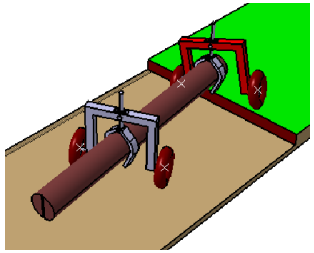

C³Bots project: two general architectures

C³Bots = Collaborative Cross & Carry Mobile RoBots

- C³Bots
  - Introduction
  - Devices
  - OpenWHEEL
- Kinematics
- Locomotion
- Conclusion

C³Bots DGP Dorsal General Payload

- PHD of Bassem HICHRI
- Structured terrain (for the moment)
- Payload of **any shape**
- **Dorsal** storage
- Described in a separate paper at EUCOMES 2014

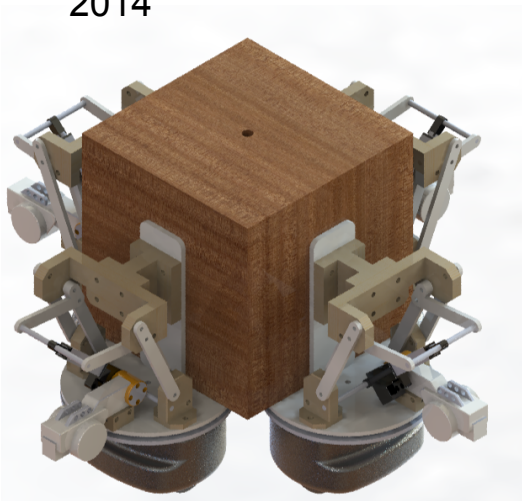

C³Bots AT VLP All-Terrain Ventral Long Payload

- Post-Doctoral period of of Mohamed KRID
- Described in this paper
- Heavy long payloads should be stored lower → **ventral storage**, between axle wheels
- **Which kinematic** chain to connect the payload to the mono-robots ?

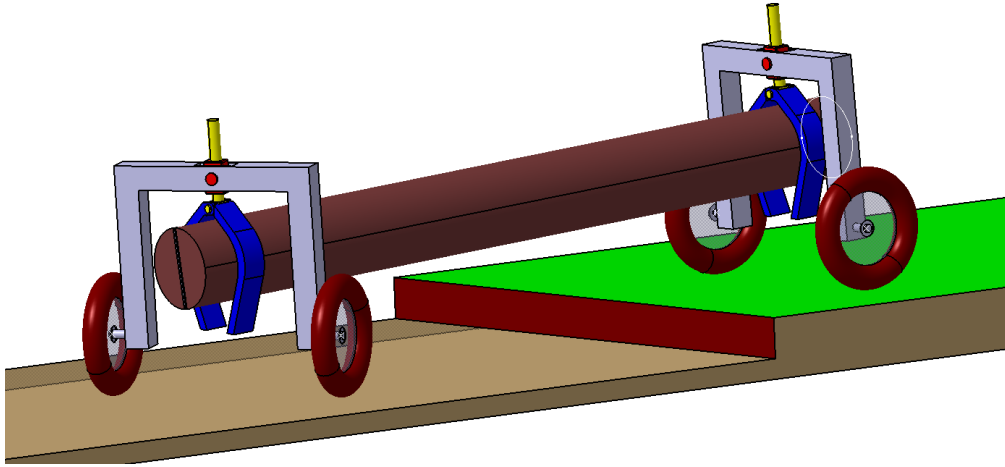

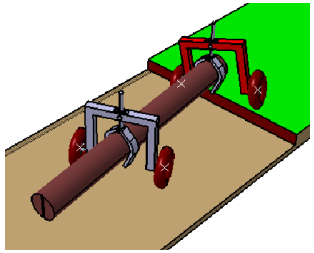

Existing devices: mobile robots

C³Bots = Collaborative Cross & Carry Mobile RoBots

Robots that carry objects

Mars rover pair cooperatively transporting a long payload [1]

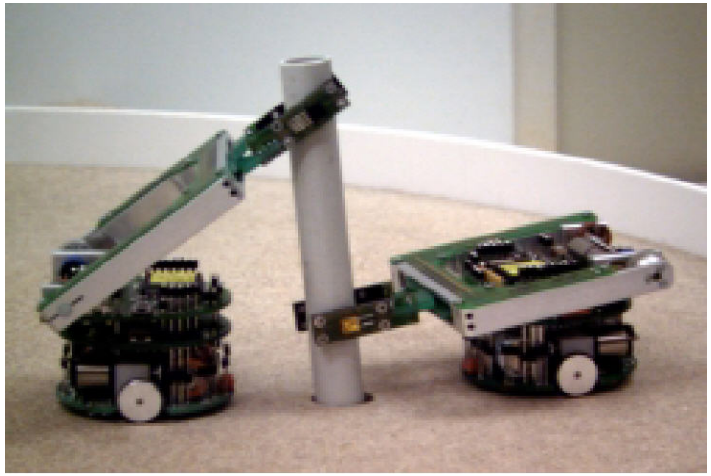

Collaborative stick-pulling [3]

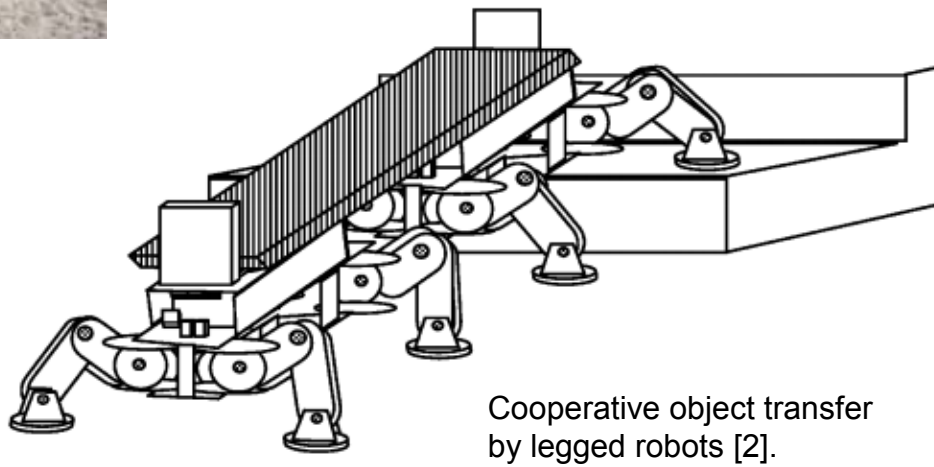

Cooperative object transfer by legged robots [2].

[1] Trebi-Ollennu and all. *Mars rover pair cooperatively transporting a long payload*. In Robotics and Automation, 2002. Proceedings. ICRA '02. Vol. 3, pp. 3136-3141, 2002.

[2] Aiyama, Hara, Yabuki, Ota, and Arai. *Cooperative transportation by two four-legged robots with implicit communication*. Robotics and Autonomous Systems, 29(1), 13-19, 1999.

[3] Ijspeert, Martinoli, Billard and Gambardella. *Collaboration through the exploitation of local interactions in autonomous collective robotics: the stick pulling experiment*, Autonomous Robots, 11(2), 149-171, 2001.

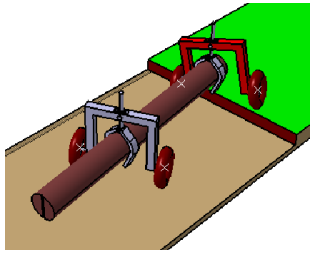

Existing devices: mobile robots

C³Bots = Collaborative Cross & Carry Mobile RoBots

Collaborative robots

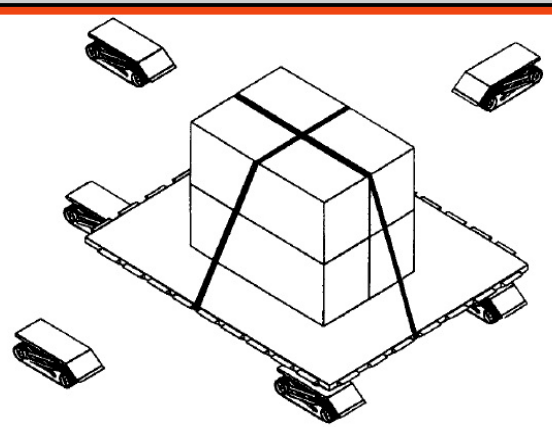

Army-Ant: object lifting on robot bodies [3]

Swarmanoïd [5]

[4] Bay, *Design of the Army-Ant cooperative lifting robot,* IEEE Robotics Automation Magazine 2(1), 36-43, 1995.
[5] Dorigo, *Swarmanoid: a novel concept for the study of heterogeneous robotic swarms*, IEEE Robotics & Automation Mag., 2012.
[6] Siegwart, Lamon, Estier, Lauria, and Piguet, *Innovative design for wheeled locomotion in rough terrain*, Robotics and Autonomous Systems, 40(2–3), 151–162, 2002.
[7] Michaud *et al*, *Co-design of AZIMUT, a multi-modal robotic platform,* Proc. ASME 2003 Design Eng. Tech. Conf. and Computers and Info. In Eng. Conference, pp. 46-50. 2003

Obstacle crossing and leg-wheel hybrid locomotion

Shrimp [6]
6 wheels on 2 // bogies
and 1 front linkage
Deformable adaptative
frame. Low actuation

Azimut [7]
Four orientable tracks
can be used as legs

Krid / Fauroux / Bouzgarrou
IFMA / Institut Pascal

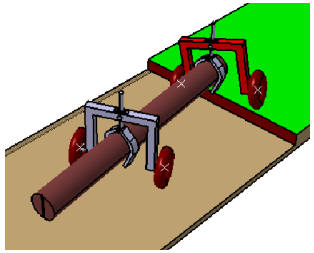

Existing devices: specialized transport

Transporting long payloads

Several patents for **long payload** transport (giant windmill blades)

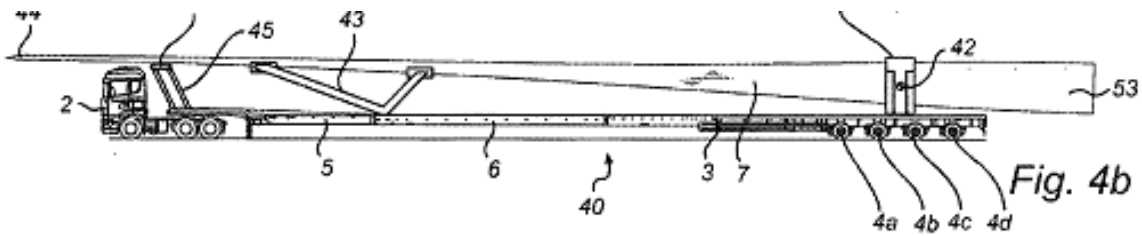

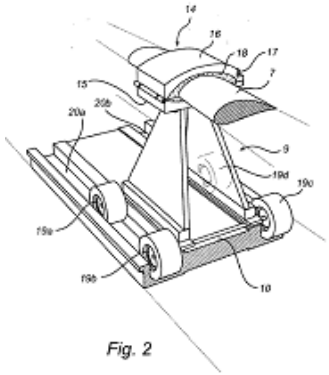

Telescopic vehicle and process for transporting a long payload [EP2328795B1]

- Truck + rear trailer connected by an extensible beam
- **Reconfigurable** according to payload length

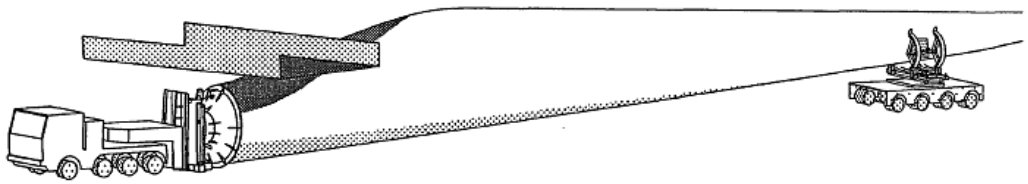

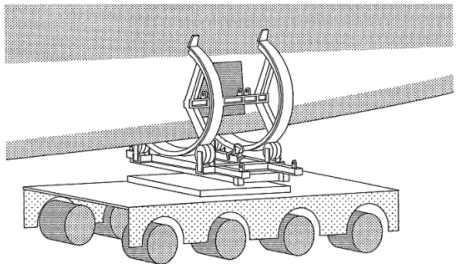

Vehicle for transporting over-dimensioned payloads [EP1465789B1]

- **Payload used as a part** of the transporting system
- Low attachment to the trailer + blade orientation

→ **reconfiguration for obstacle overcoming** (tunnels)

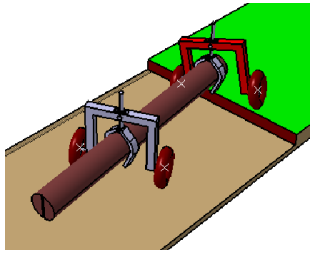

OpenWHEEL i3R

Requirements

- Only 4 wheels for stable obstacle crossing
- Minimal actuation

Kinematics

- Each wheel can cross the obstacle : $T_x + T_z$
- Kinematical **conciseness**: each joint has multiple uses
  - R_0 : T_z lift of the 4 wheels + fitting irregular ground
  - R_1 & R_2: steering + ≈T_x + stabilization

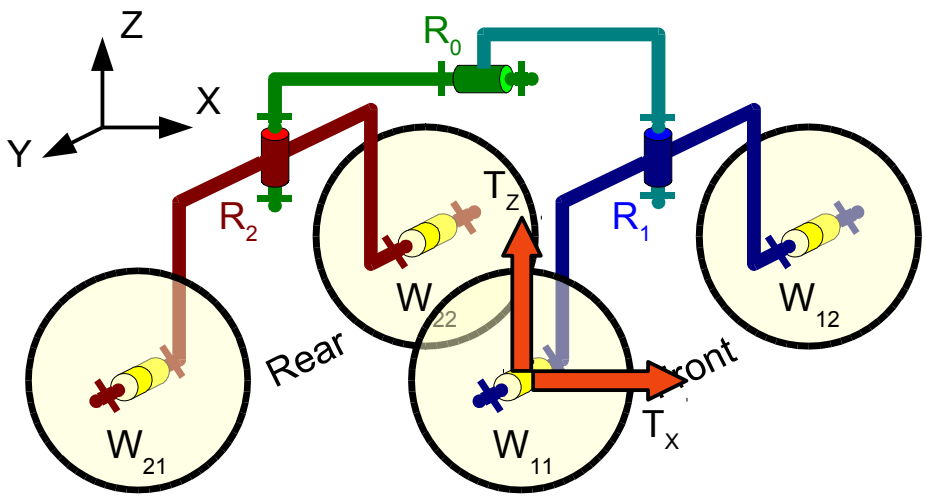

- A complete **stable climbing process** in 19 stages

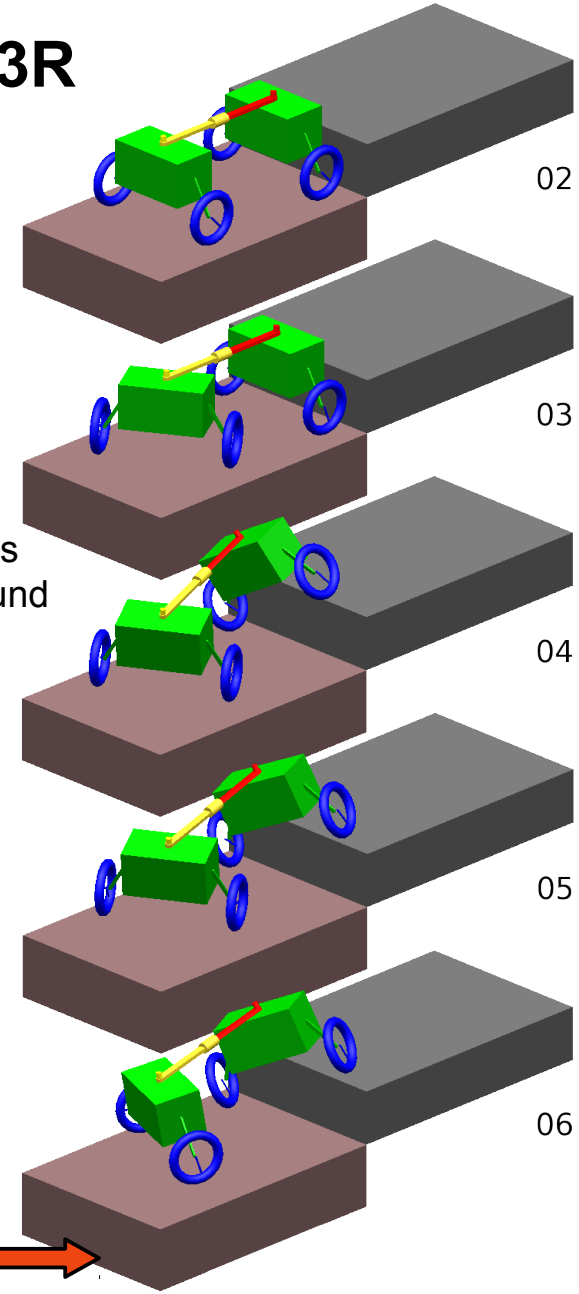

[8] Fauroux, Chapelle and Bouzgarrou. *A New Principle for Climbing Wheeled Robots: Serpentine Climbing with the OpenWHEEL Platform*, Proc. of IROS'2006, Beijing, China, October 9-15, pp.3405-3410, 2006

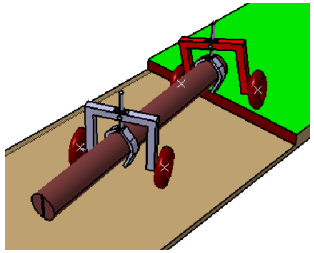

OpenWHEEL i3R

Locomotion mode in 19 stages

Video

C³Bots = Collaborative Cross & Carry Mobile RoBots

- C³Bots
  - Introduction
  - Devices
  - OpenWHEEL
- Kinematics
- Locomotion
- Conclusion

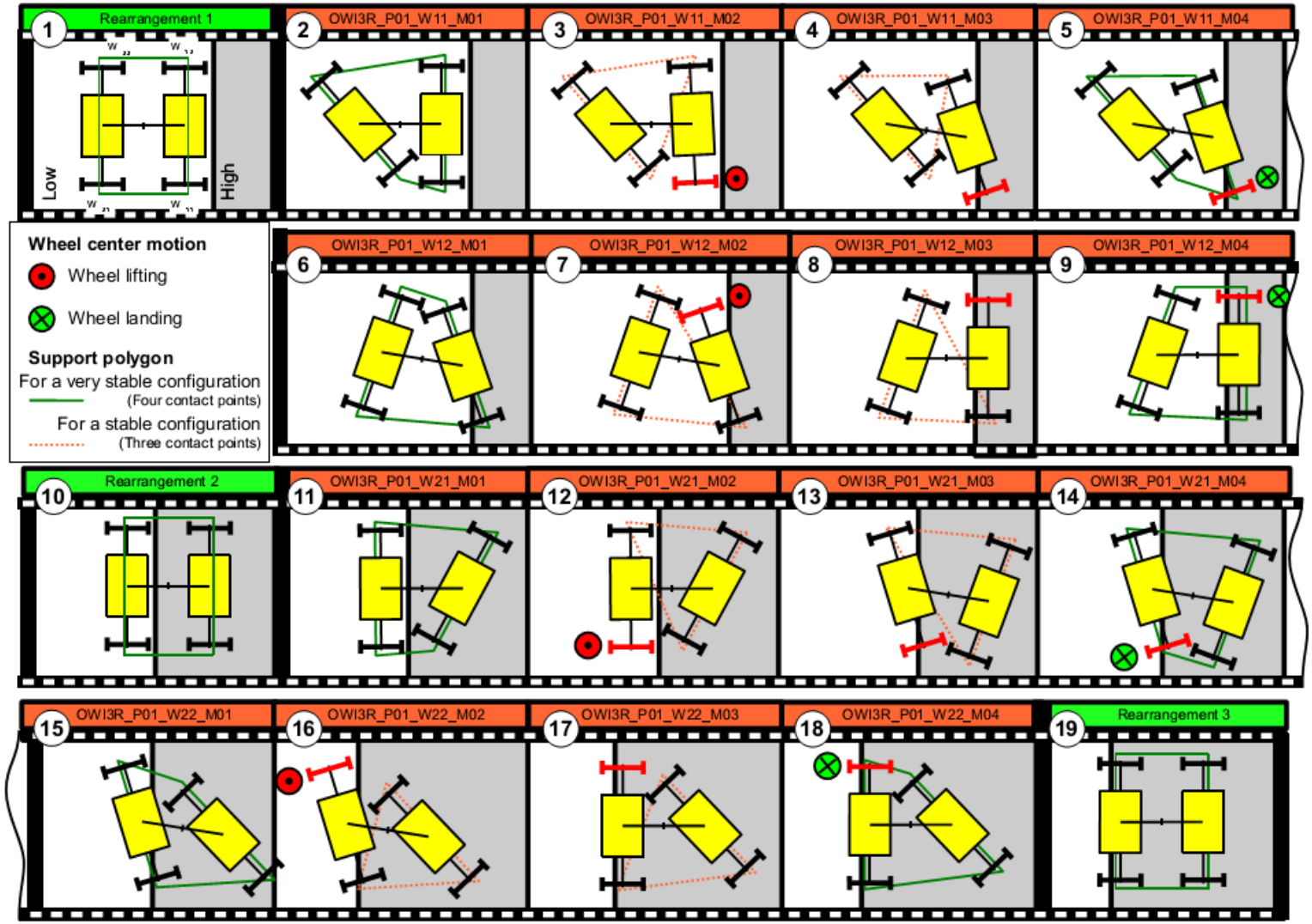

Krid / Fauroux / Bouzgarrou
IFMA / Institut Pascal

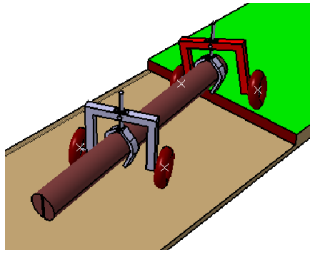

Design Requirements from OpenWHEEL i3R

C³Bots = Collaborative Cross & Carry Mobile RoBots

- C³Bots
- Kinematics
  - Design req.
  - Mobilities
  - Kin. Solution
- Locomotion
- Conclusion

Requirement R1 = Adding modularity to OpenWHEEL i3R

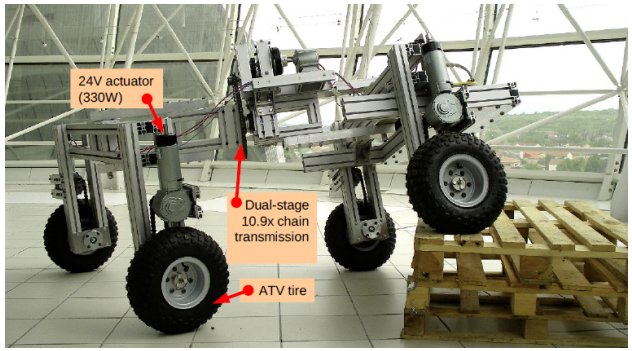

Poly-robot

=

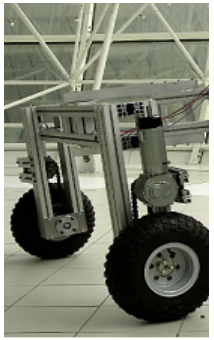

Mono-robot 2

U

Mono-robot 1

Requirement R2 = Including the payload into the poly-robot

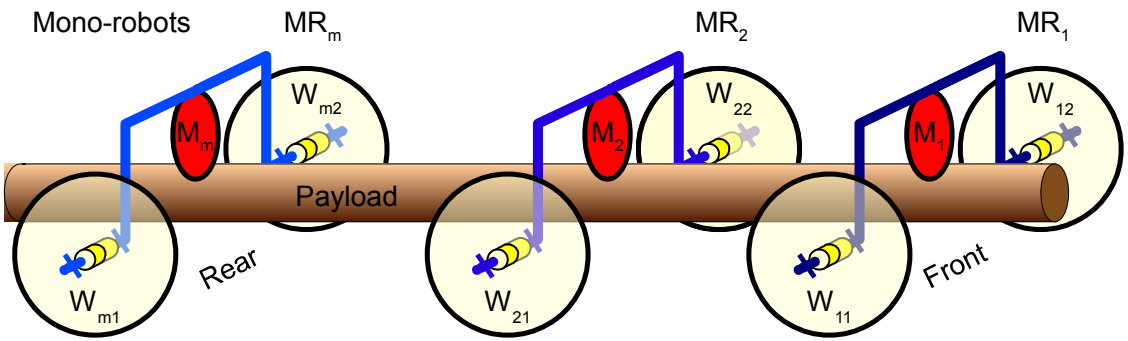

Unknown kinematic chains

- Find the unknown mechanisms M_a from the mono-robot MR_a with a = 1...m
- Kinematical **conciseness**

Krid / Fauroux / Bouzgarrou
IFMA / Institut Pascal

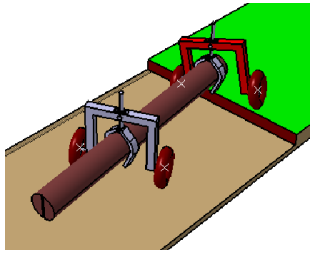

Required mobilities

C³Bots = Collaborative Cross & Carry Mobile RoBots

- C³Bots
- Kinematics
  - Design req.
  - Mobilities
  - Kin. Solution
- Locomotion
- Conclusion

Requirement R3 Stability condition

- Steering axle a+1 stabilizes the robot when axle a crosses the obstacle
  → **steering mobility R_z** required for MR_a

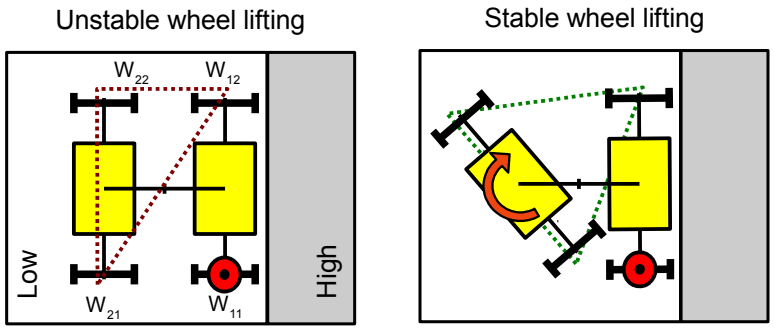

- Obstacle crossing → Frame tilting → Projected centre of mass G' goes to the rear $P_2G' = b\cos(\theta)/2 - h_l h_s / b$
  → the rear axle has difficulties to cross
  → required **mobility T_x of G**

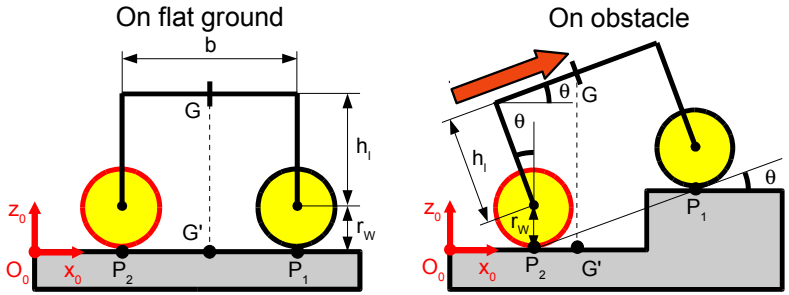

- A poly-robot with a **long aspect-ratio** cannot stabilize itself during wheel-crossing only with steering
  → the mobility T_x of G can be achieved with a **mobility T_x on every MR_a**

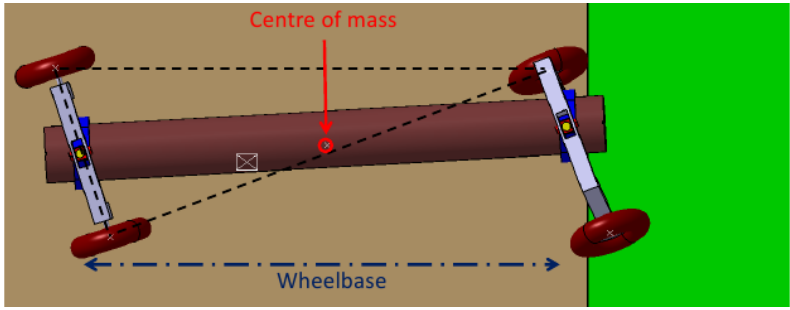

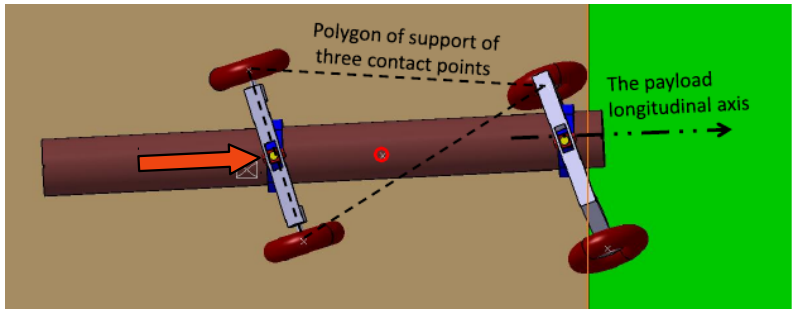

Krid / Fauroux / Bouzgarrou
IFMA / Institut Pascal

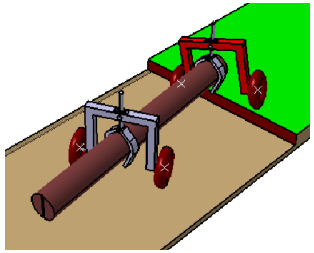

Required mobilities

C³Bots = Collaborative Cross & Carry Mobile RoBots

- C³Bots
- Kinematics
  - Design req.
  - Mobilities
  - Kin. Solution
- Locomotion
- Conclusion

Requirement R4: Payload elevation

- The poly-robot should catch the payload on the ground and elevate it under its wheels
→ **T_z elevation translation** of gripper with respect to mono-robot

Summary of required mobilities

Mobilities of the gripper with respect to the frame of each mono-robot

- **T_x** for **enhanced stabilization** (R3)
- **R_x** for **wheel elevation** during obstacle crossing & **fitting irregular grounds**
- **T_z** for **payload elevation**
- **R_z** for **steering** & **OpenWHEEL-like stabilization** (R3)

Kinematical conciseness

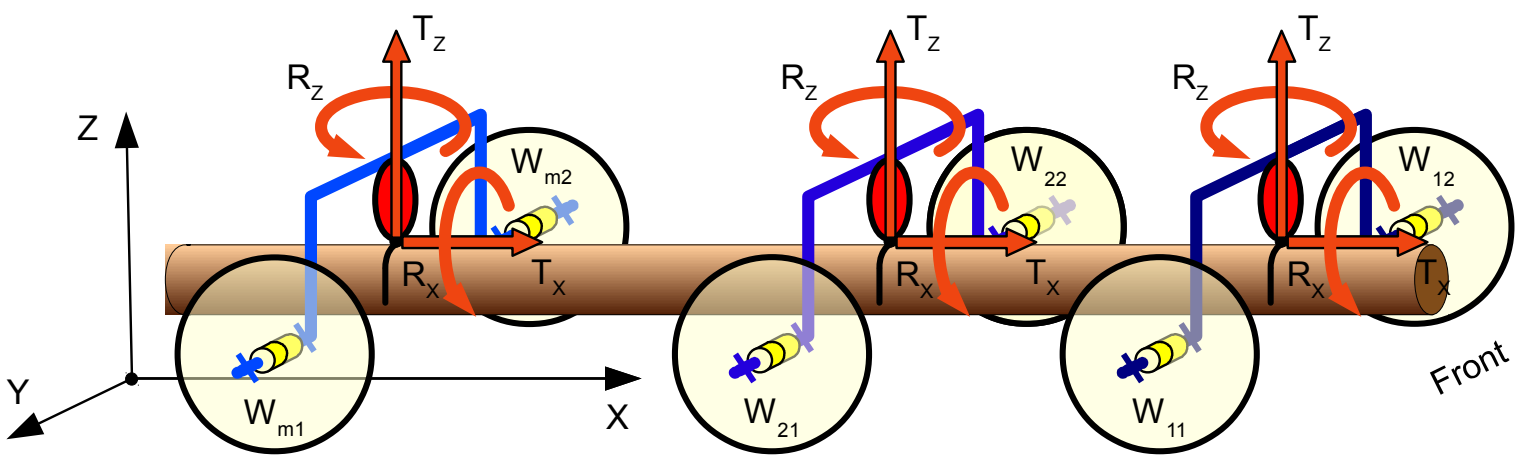

Kinematics of the mono-robot

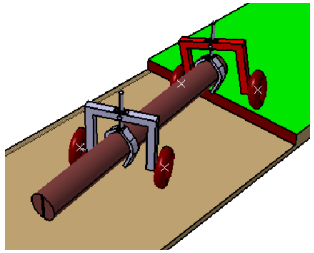

C³Bots = Collaborative Cross & Carry Mobile RoBots

- C³Bots
- Kinematics
  - Design req.
  - Mobilities
  - Kin. Solution
- Locomotion
- Conclusion

A feasible solution with T_x generated by rollers

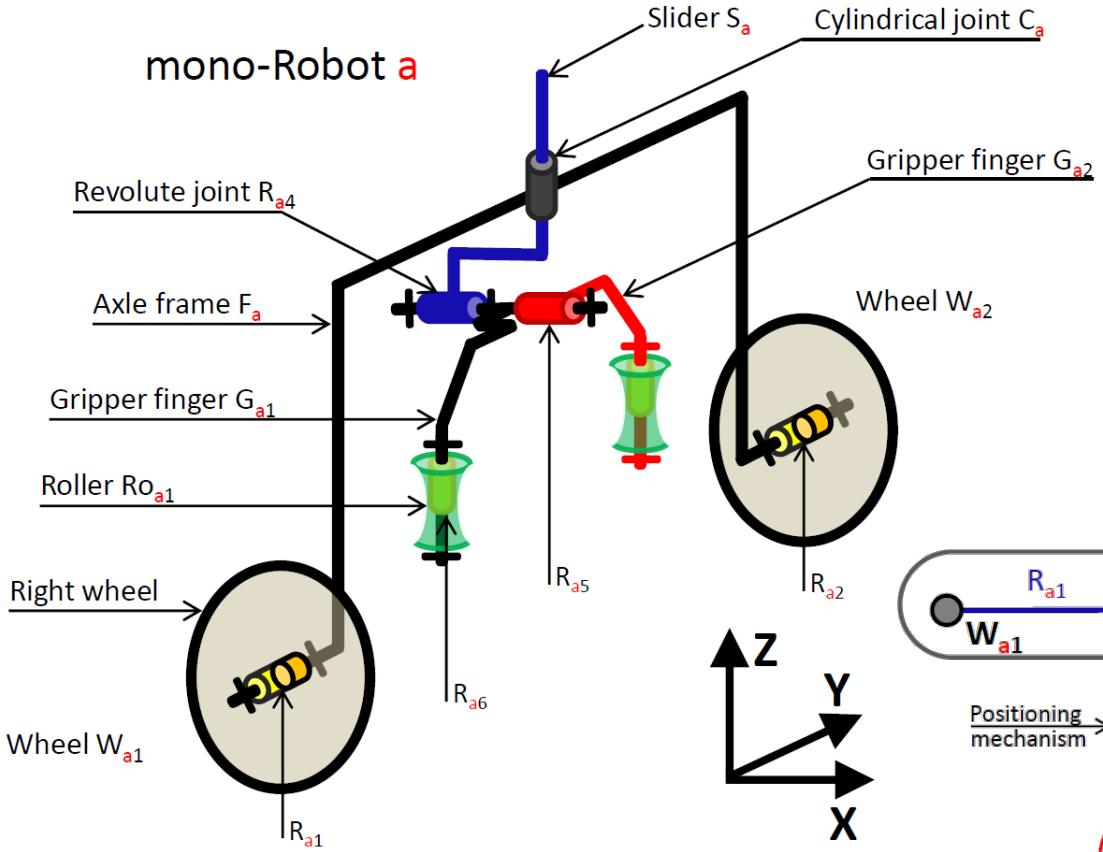

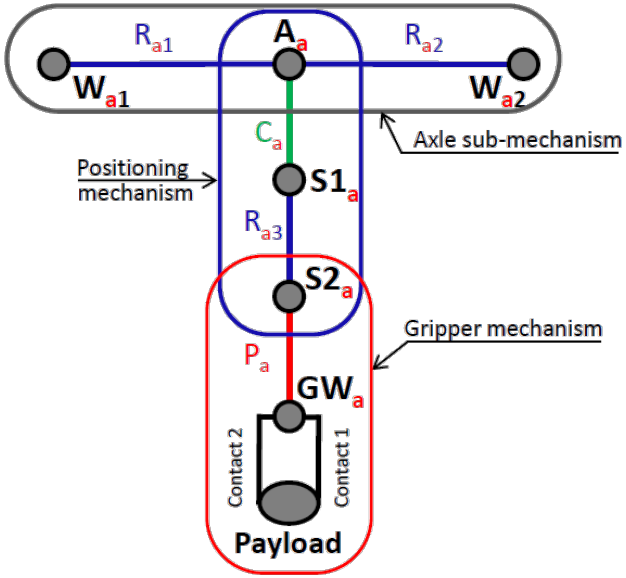

Krid / Fauroux / Bouzgarrou
IFMA / Institut Pascal

Kinematics of the mono-robot

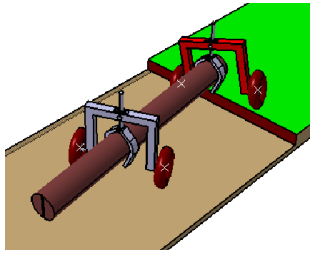

C³Bots = Collaborative Cross & Carry Mobile RoBots

- C³Bots
- Kinematics
  - Design req.
  - Mobilities
  - Kin. Solution
- Locomotion
- Conclusion

An alternative solution with a T_x slider

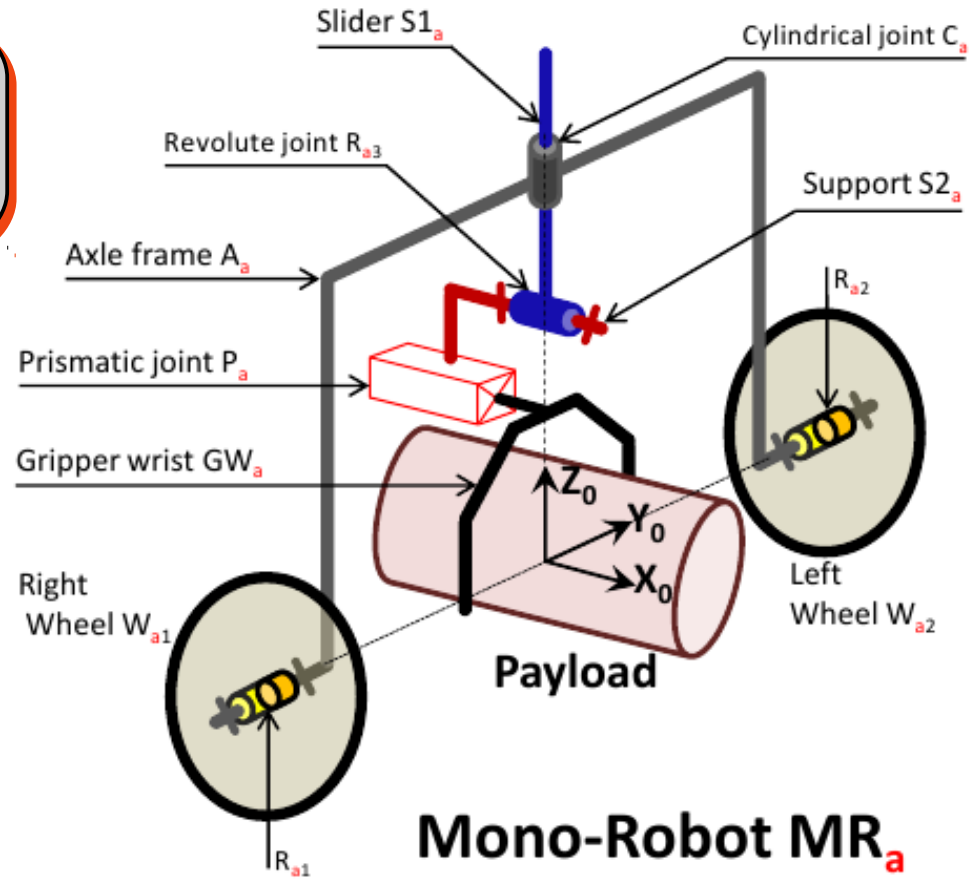

Alternatives

- Equivalent joint combinations to generate the 4 mobilities T_x, R_x, T_z, R_z
- Parallel mechanisms could also be used

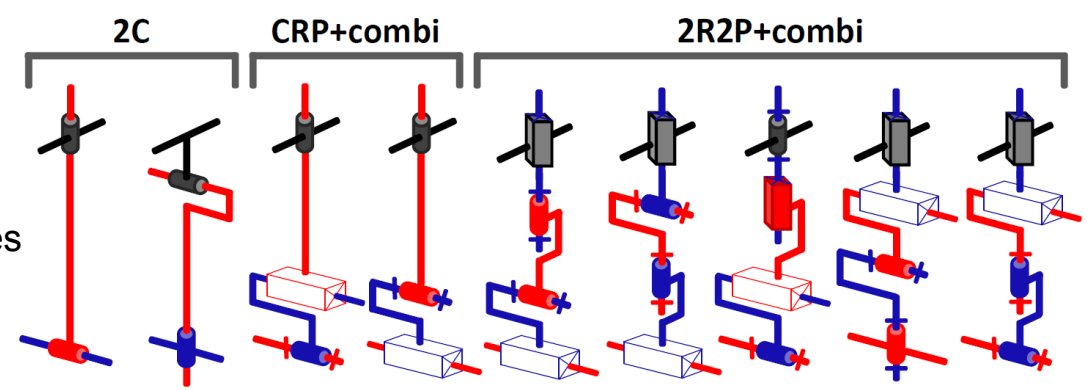

Krid / Fauroux / Bouzgarrou
IFMA / Institut Pascal

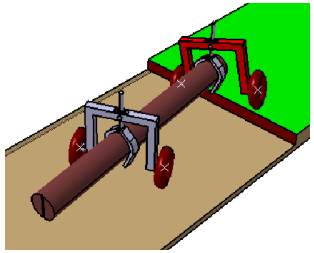

Kinematics of the poly-robot

Case of 2 Mono-Robots

C³Bots = Collaborative Cross & Carry Mobile RoBots

- C³Bots
- Kinematics
  - Design req.
  - Mobilities
  - Kin. Solution
- Locomotion
- Conclusion

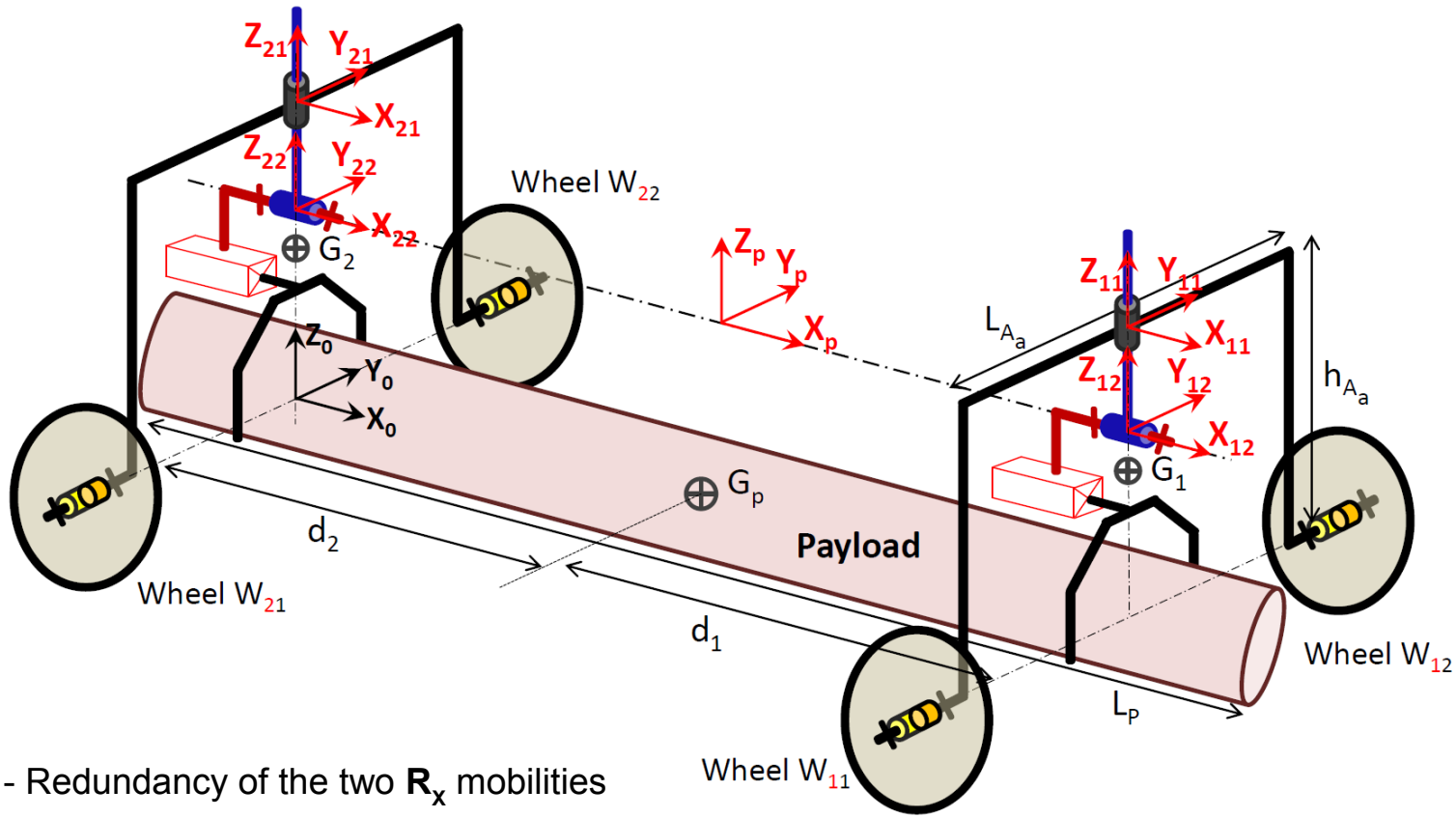

- Redundancy of the two $\mathbf{R_x}$ mobilities can be used for lateral balancing of the payload

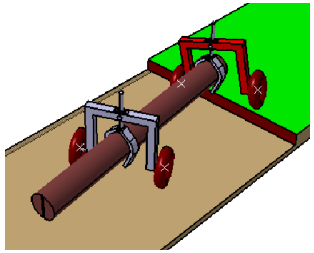

3+ axles: 2D crossing mode

2D crossing mode

C³Bots = Collaborative Cross & Carry Mobile RoBots

- C³Bots
- Kinematics
- Locomotion
  - 3+ axles
  - 2 axles
- Conclusion

- Obstacle-crossing is easy with three axles and more

- Plane motion of parts in plane XZ

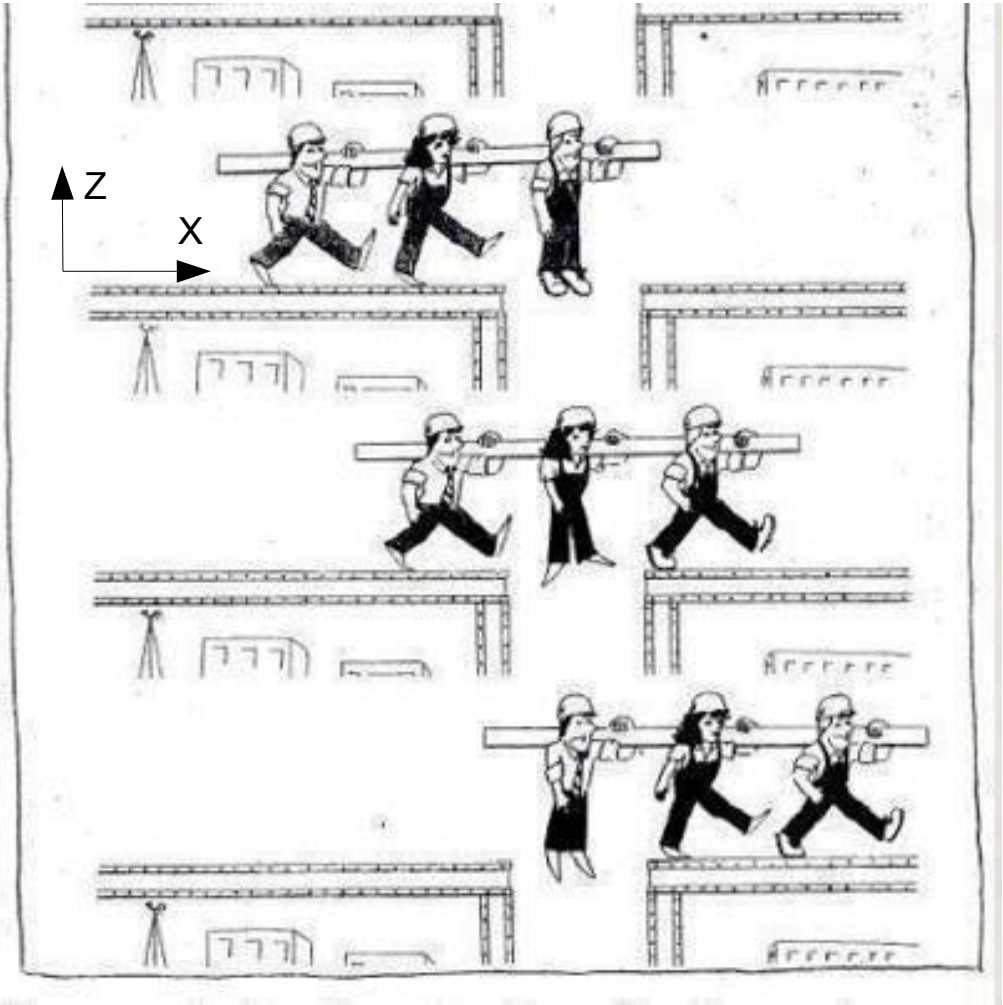

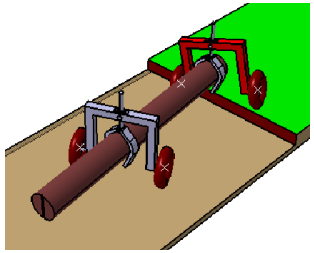

3+ axles: 2D crossing mode

2D crossing mode

C³Bots = Collaborative Cross & Carry Mobile RoBots

- C³Bots
- Kinematics
- Locomotion
  - 3+ axles
  - 2 axles
- Conclusion

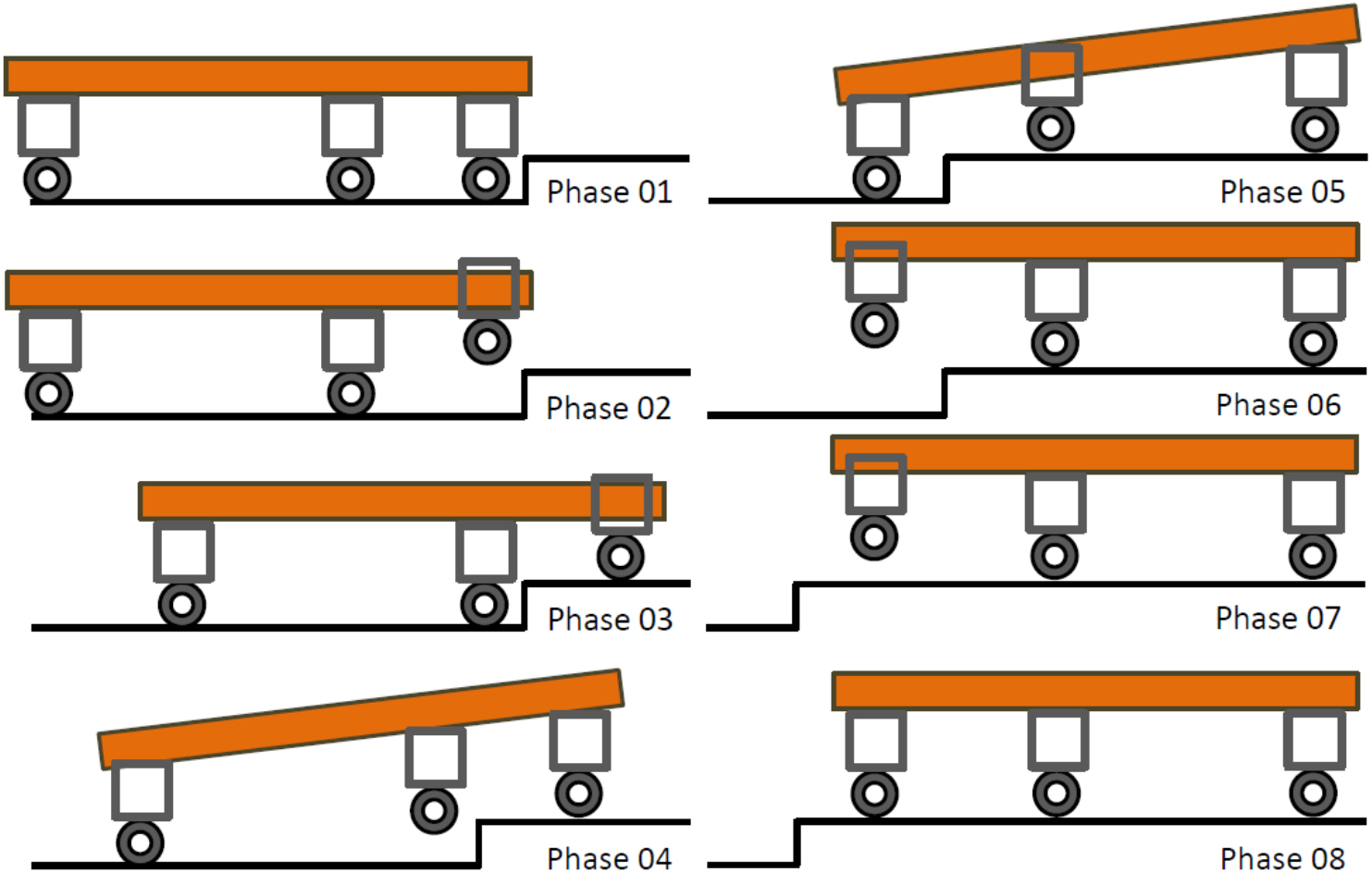

Krid / Fauroux / Bouzgarrou
IFMA / Institut Pascal

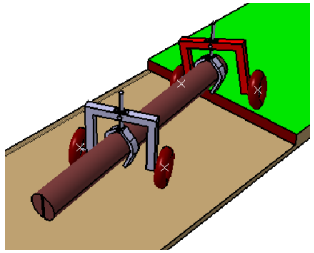

2 axles: 3D serpentine crossing mode

C³Bots = Collaborative Cross & Carry Mobile RoBots

- C³Bots
- Kinematics
- Locomotion
  - 3+ axles
  - 2 axles
- Conclusion

Process description

- Inspired form OpenWHEEL i3R locomotion mode
- **20** stages or manoeuvers
- **4 phases** (one per wheel) and intermediate manoeuvres
- Obstacle crossing of wheel W_{as} (a=axle number, s=side number) takes **4 manoeuvres**
  - Manoeuvre M_{01}: **Stabilization** (motion of axles other than a)
  - Manoeuvre M_{02}: W_{as} **elevation** $\mathbf{T_{z+}}$
  - Manoeuvre M_{02}: W_{as} **progression** $\mathbf{T_{x}}$
  - Manoeuvre M_{03}: W_{as} **landing** $\mathbf{T_{z-}}$

2 axles: 3D serpentine crossing mode
Stage 00

Poly-robot
Preparation

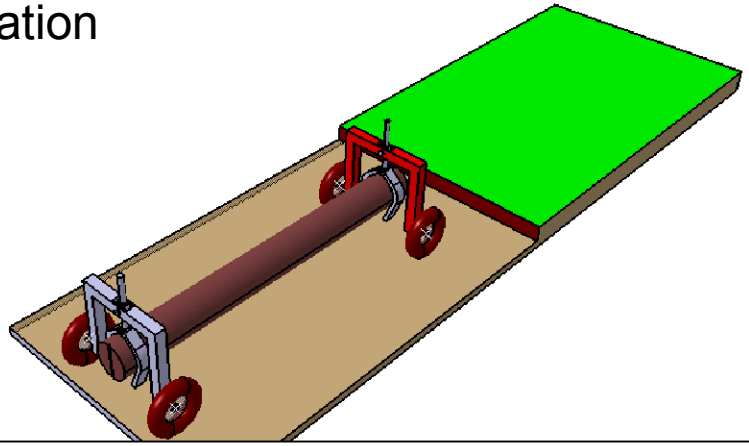

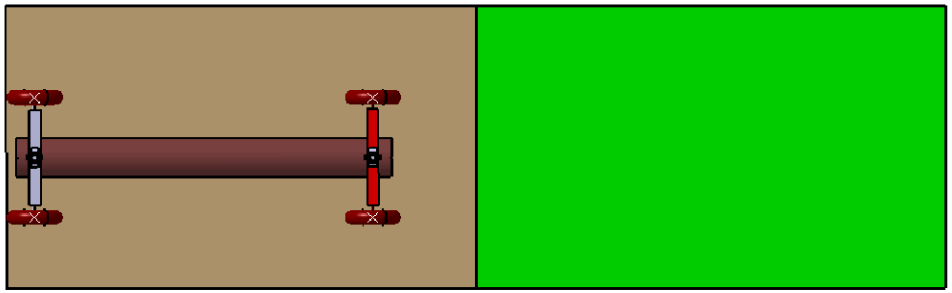

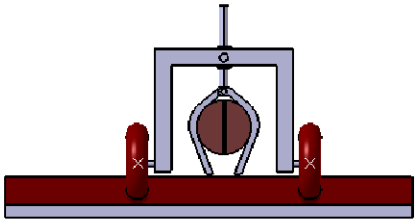

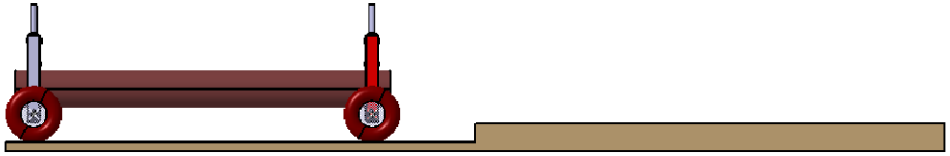

2 axles: 3D serpentine crossing mode
Stage 01

Poly-robot
Touching obstacle

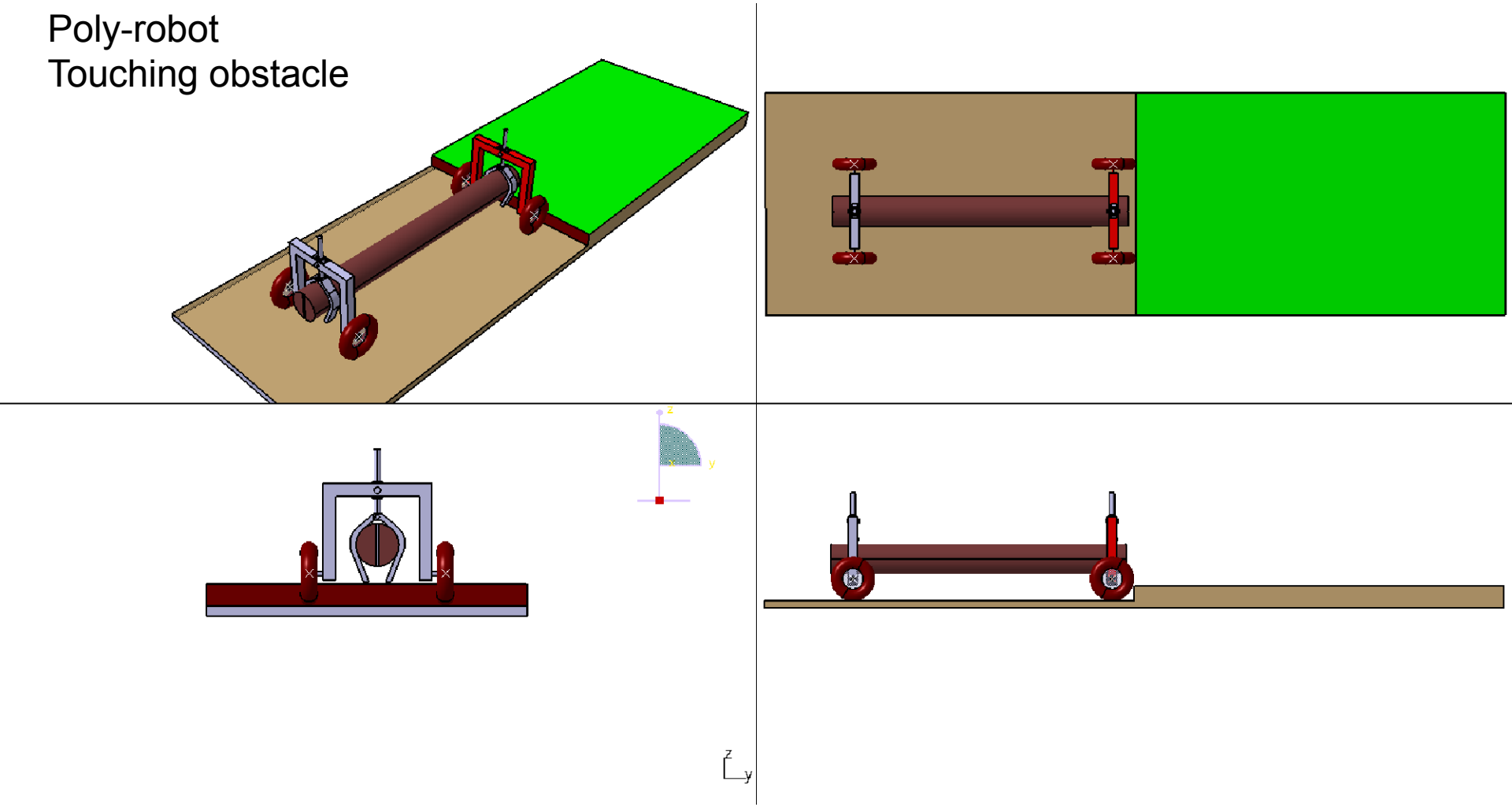

Krid / Fauroux / Bouzgarrou
IFMA / Institut Pascal

2 axles: 3D serpentine crossing mode
Stage 02 - $PW_{11}M_{01}$

W_{11} stabilization
by MR_2 combined $T_X + R_Z$

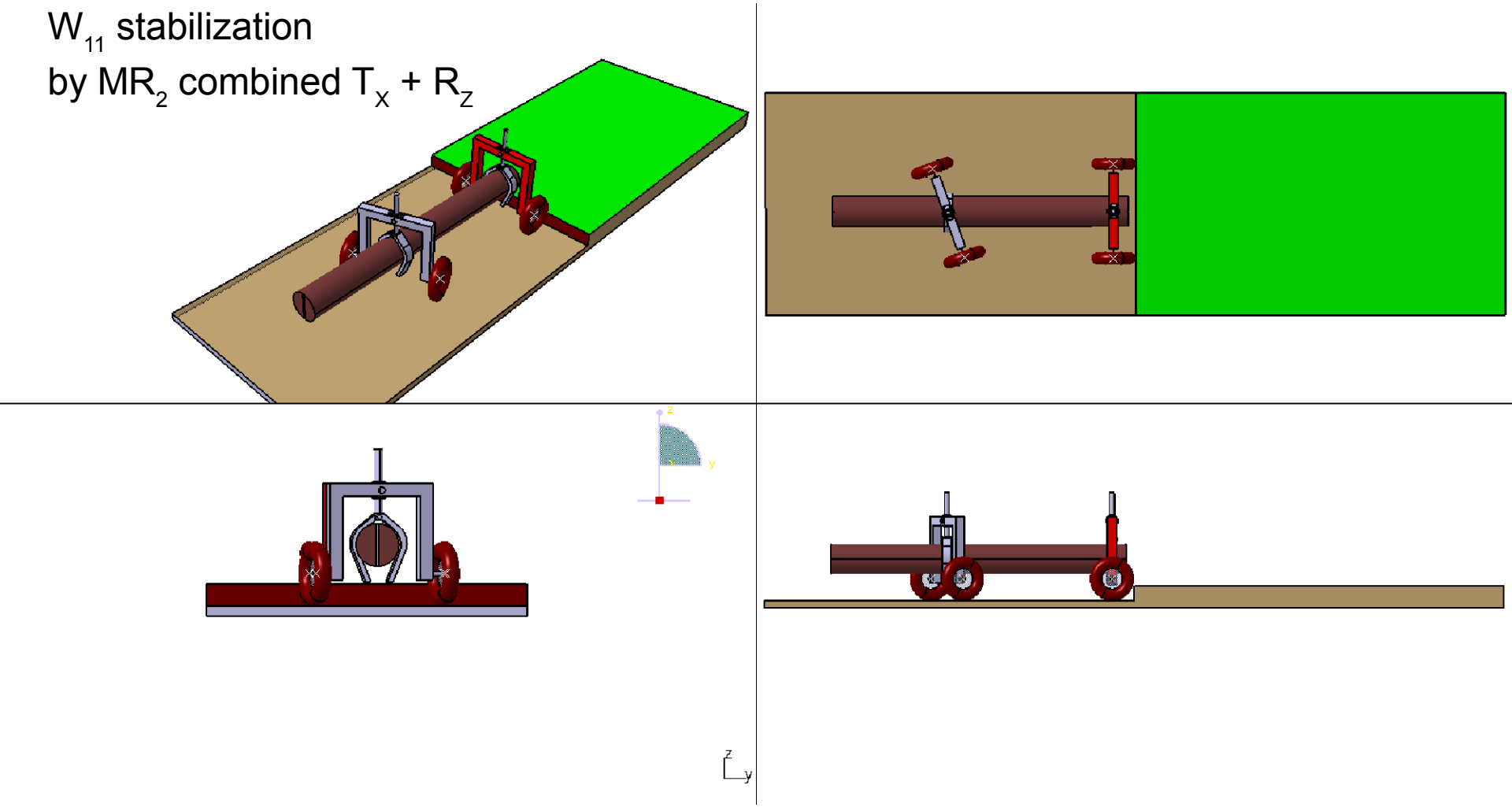

Krid / Fauroux / Bouzgarrou
IFMA / Institut Pascal

2 axles: 3D serpentine crossing mode
Stage 03 - $PW_{11}M_{02}$

W_{11} T_{Z+}

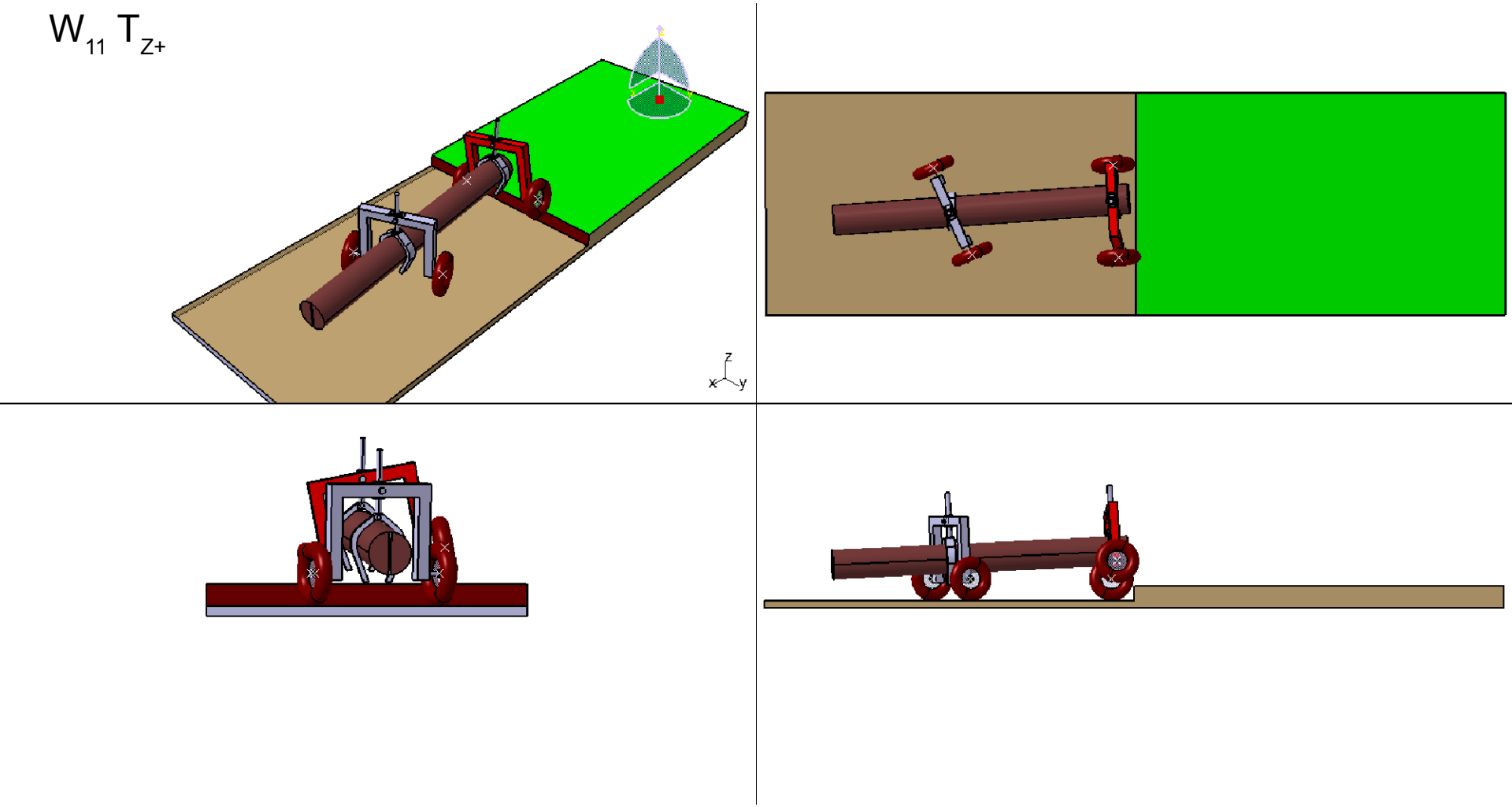

2 axles: 3D serpentine crossing mode
Stage 04 - $PW_{11}M_{03}$

W_{11} T_x

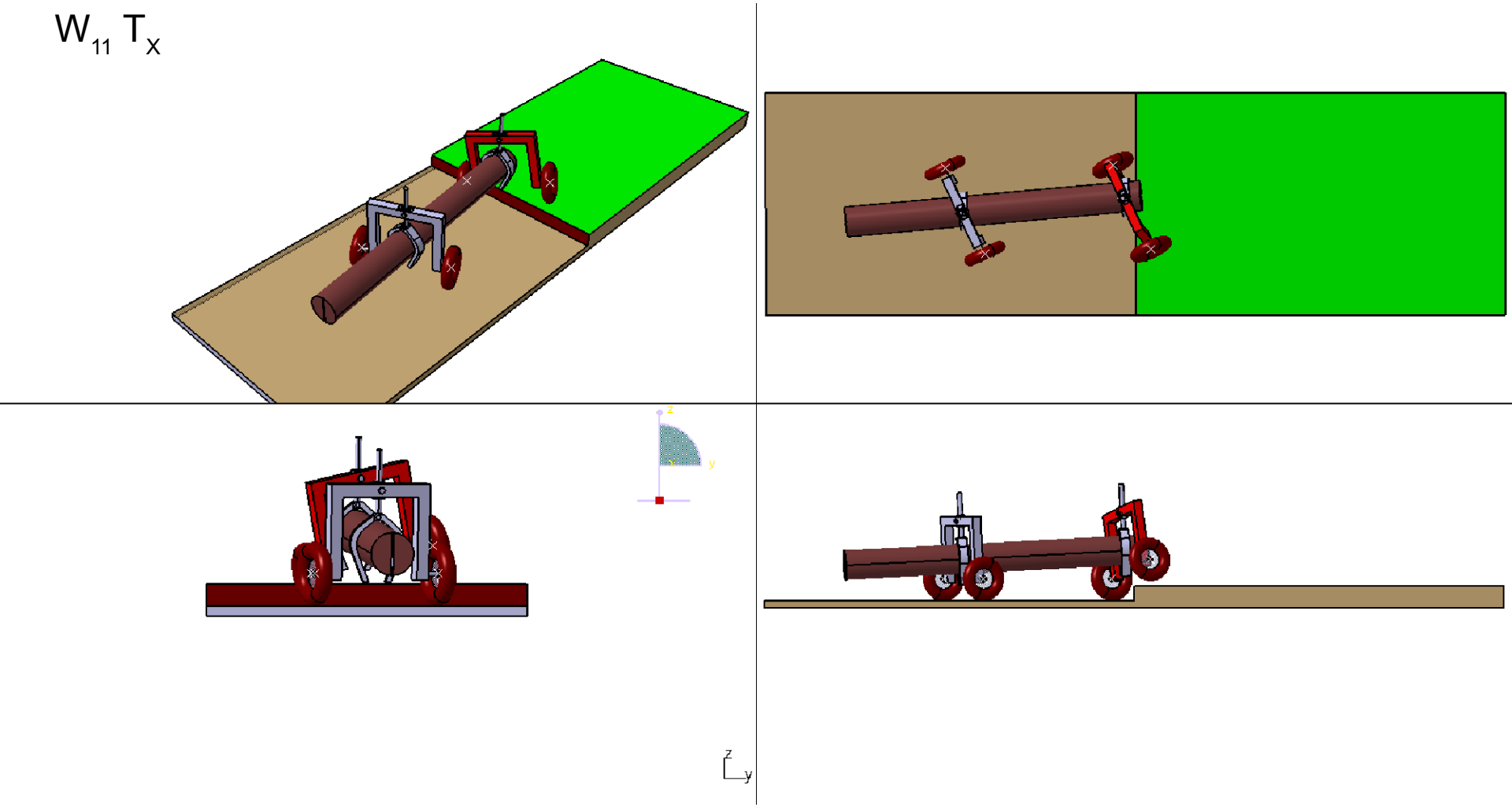

Krid / Fauroux / Bouzgarrou
IFMA / Institut Pascal

2 axles: 3D serpentine crossing mode
Stage 05 - $PW_{11}M_{04}$

W_{11} T_{Z-}

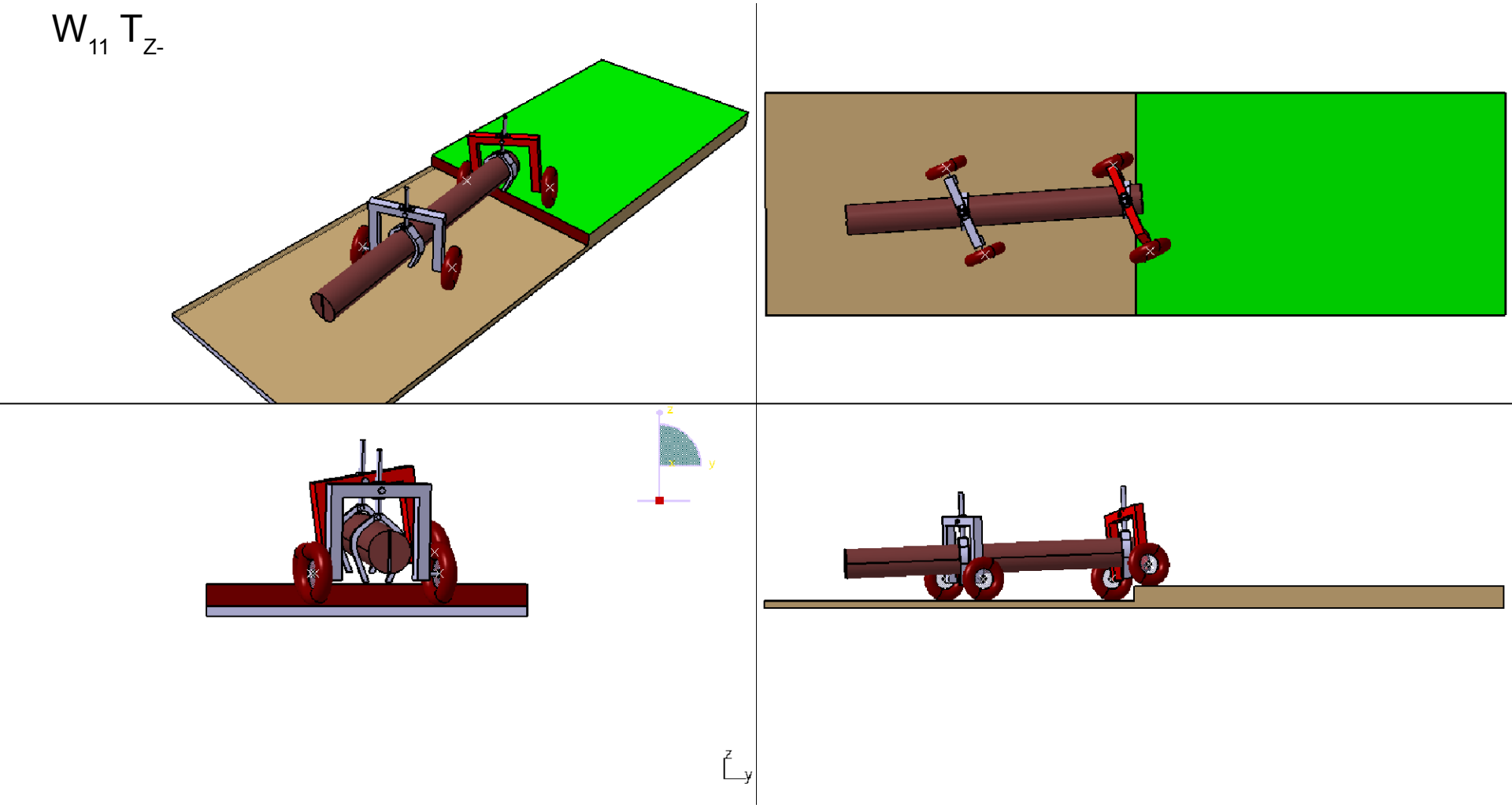

Krid / Fauroux / Bouzgarrou
IFMA / Institut Pascal

2 axles: 3D serpentine crossing mode
Stage 06 - $PW_{12}M_{01}$

W_{12} stabilization
by MR_2 rotation R_Z

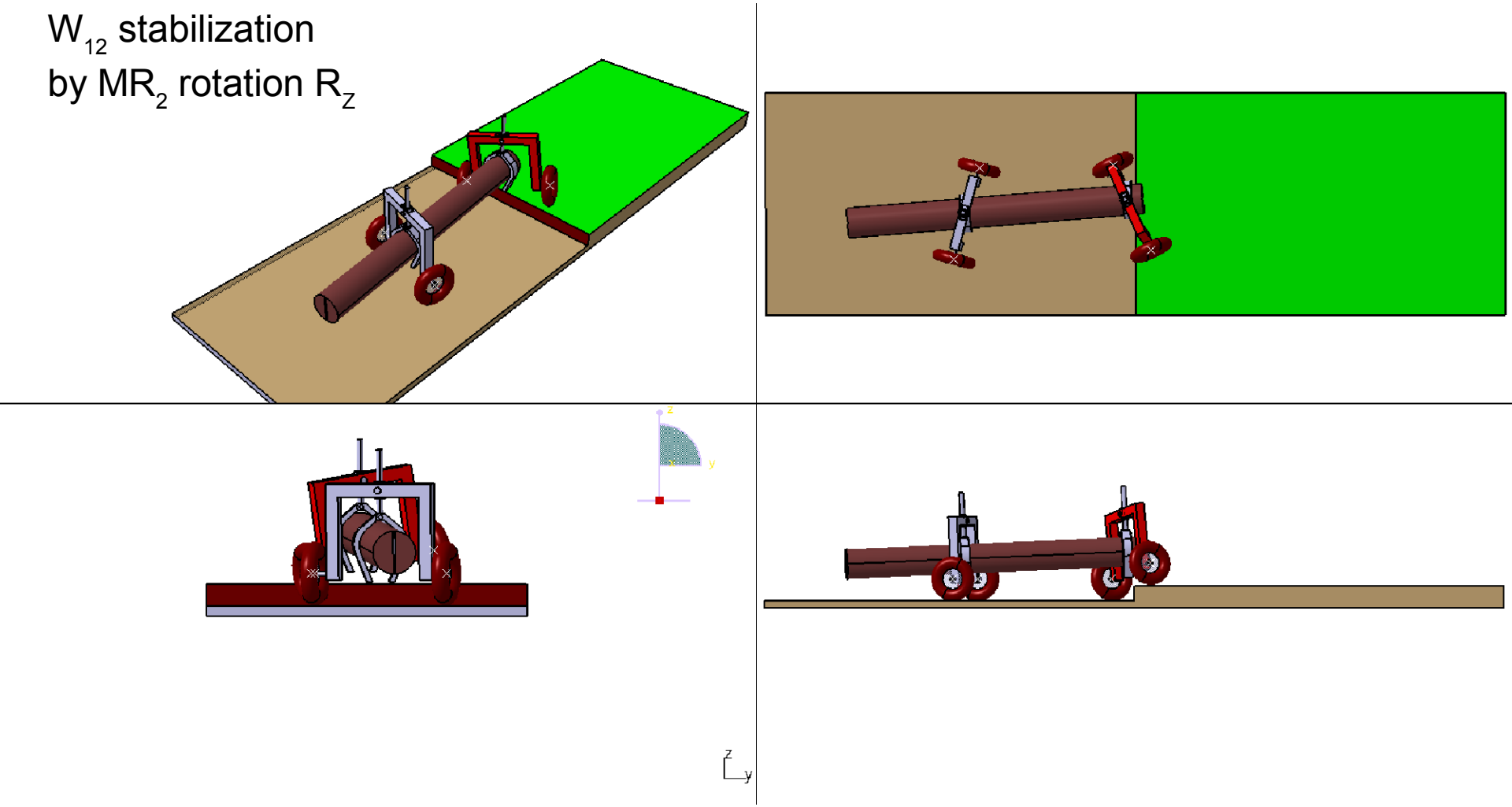

Krid / Fauroux / Bouzgarrou
IFMA / Institut Pascal

2 axles: 3D serpentine crossing mode
Stage 07 - $PW_{12}M_{02}$

W_{12} T_{Z+}

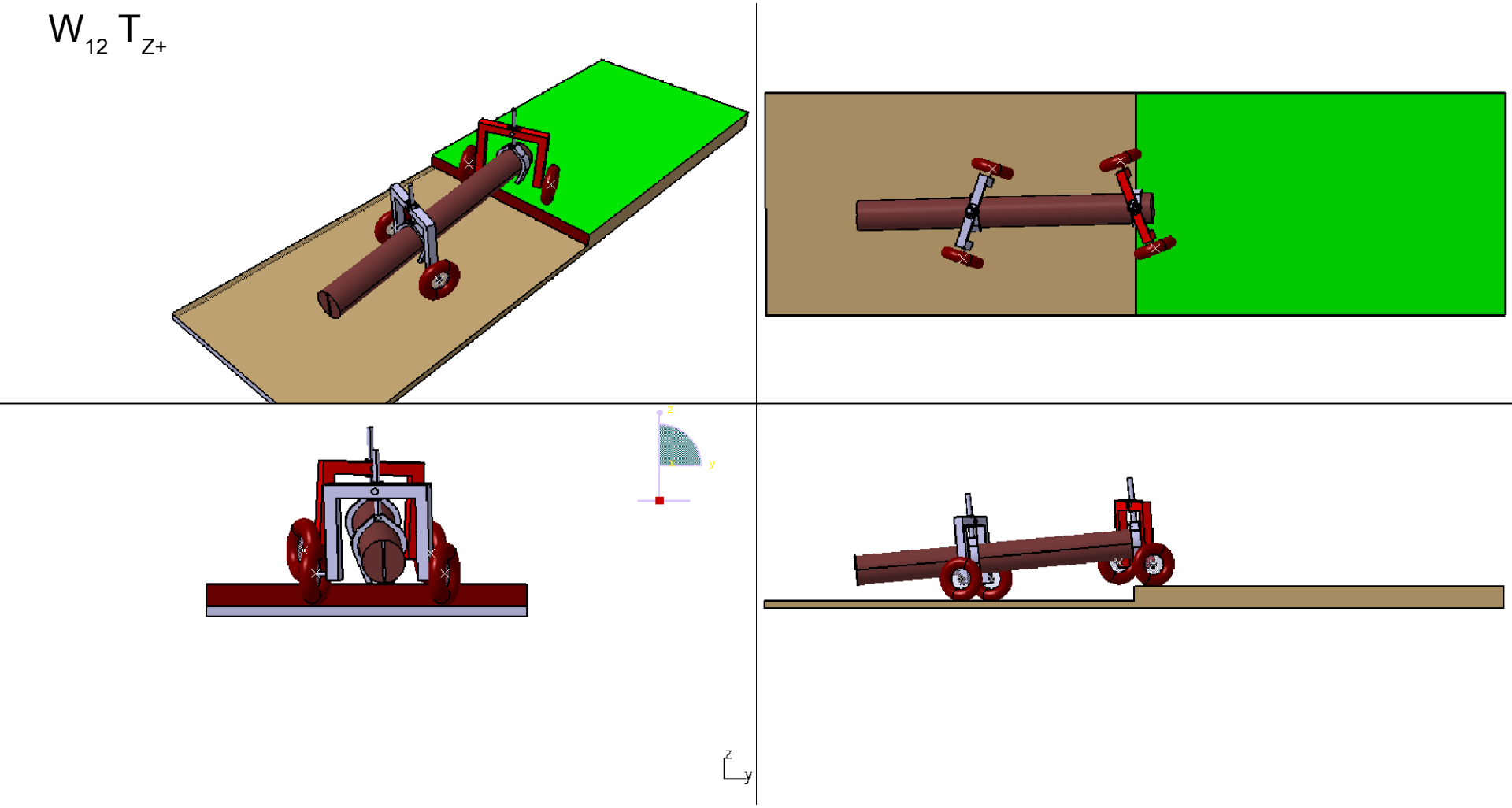

Krid / Fauroux / Bouzgarrou
IFMA / Institut Pascal

2 axles: 3D serpentine crossing mode
Stage 08 - $PW_{12}M_{03}$

W_{12} T_X

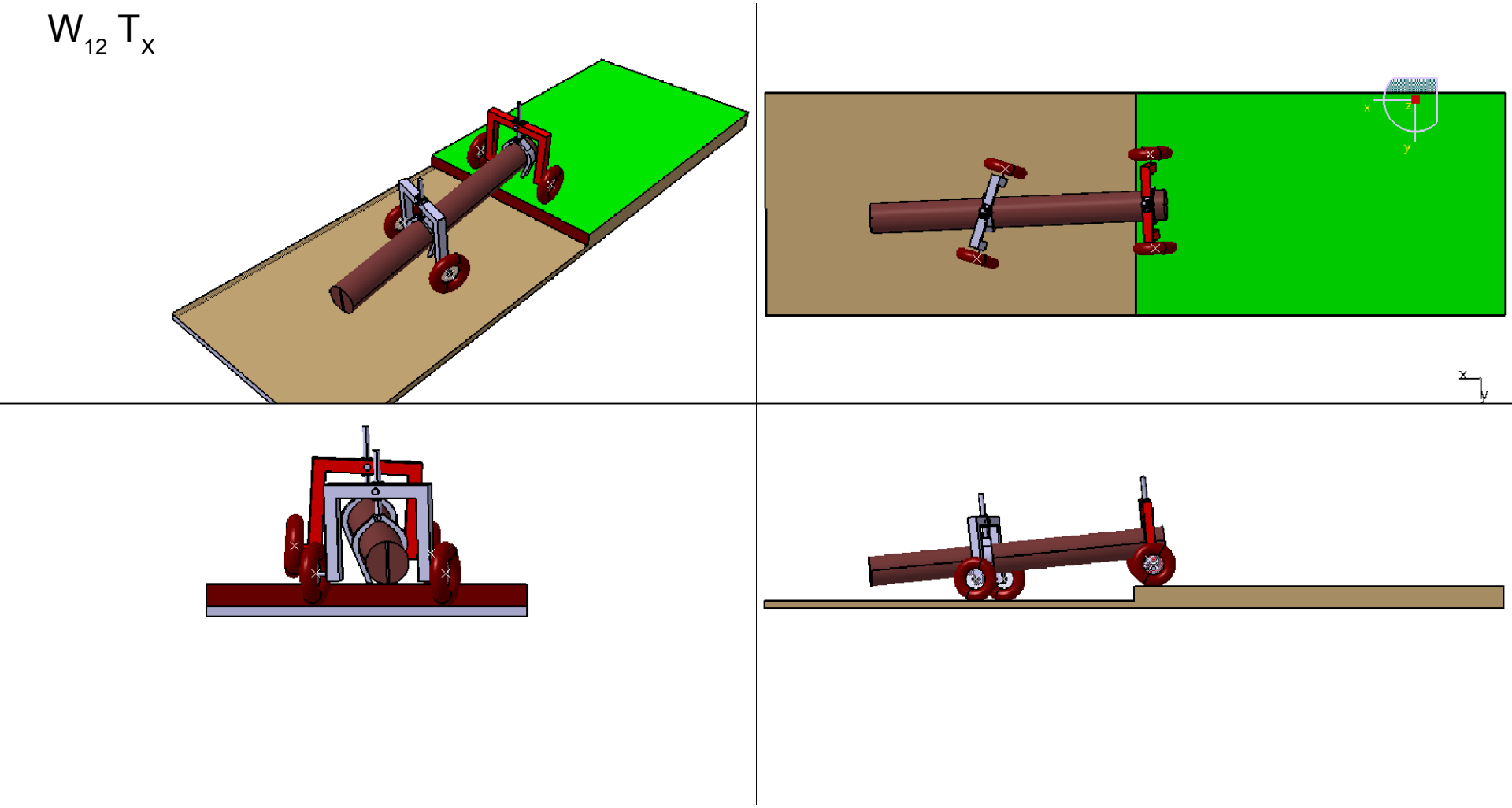

Krid / Fauroux / Bouzgarrou
IFMA / Institut Pascal

2 axles: 3D serpentine crossing mode
Stage 09 - $PW_{12}M_{04}$

W_{12} T_{Z-}

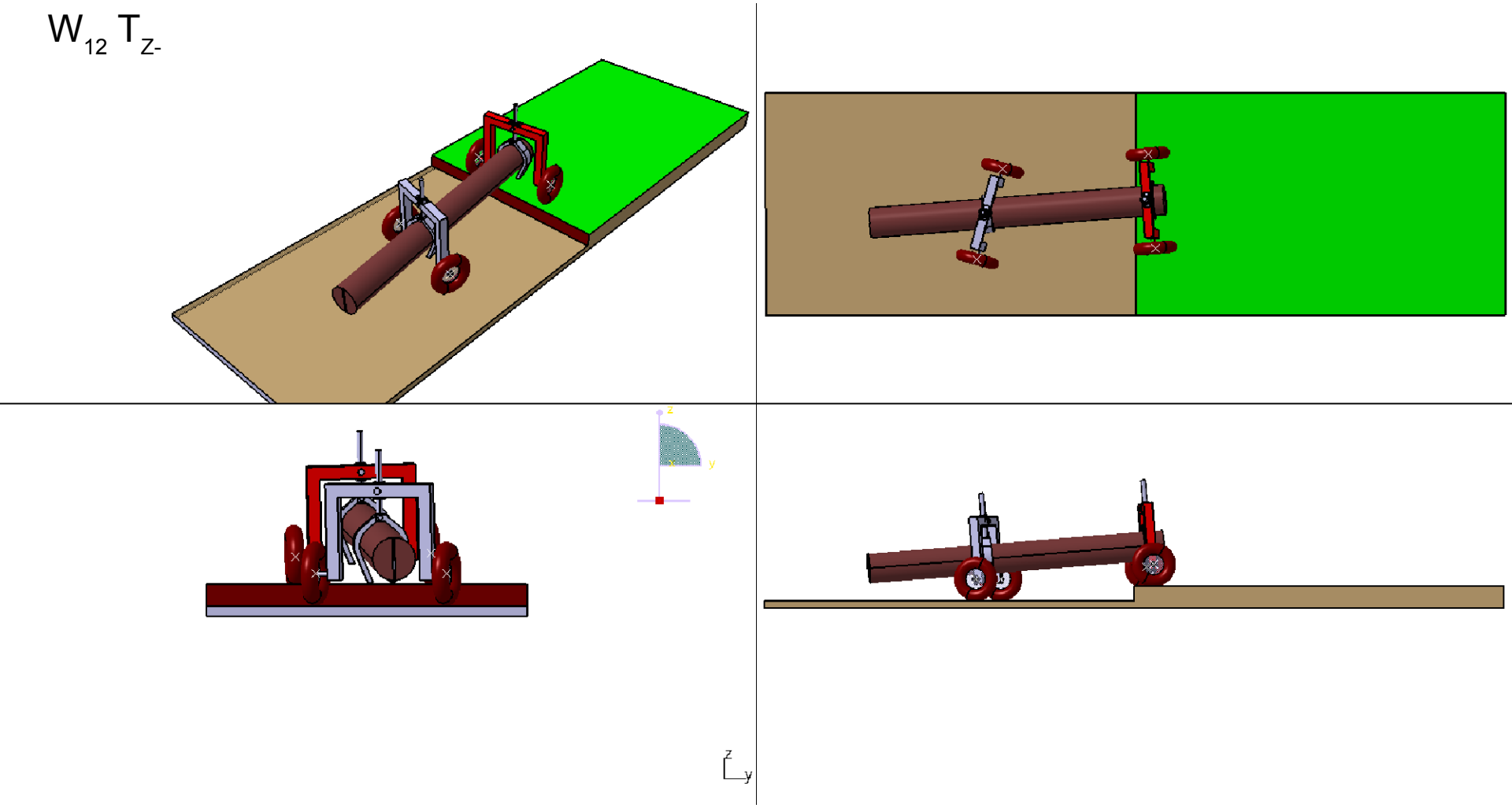

Krid / Fauroux / Bouzgarrou
IFMA / Institut Pascal

2 axles: 3D serpentine crossing mode
Stage 10

Poly-robot going forward
MR_2 moving backward

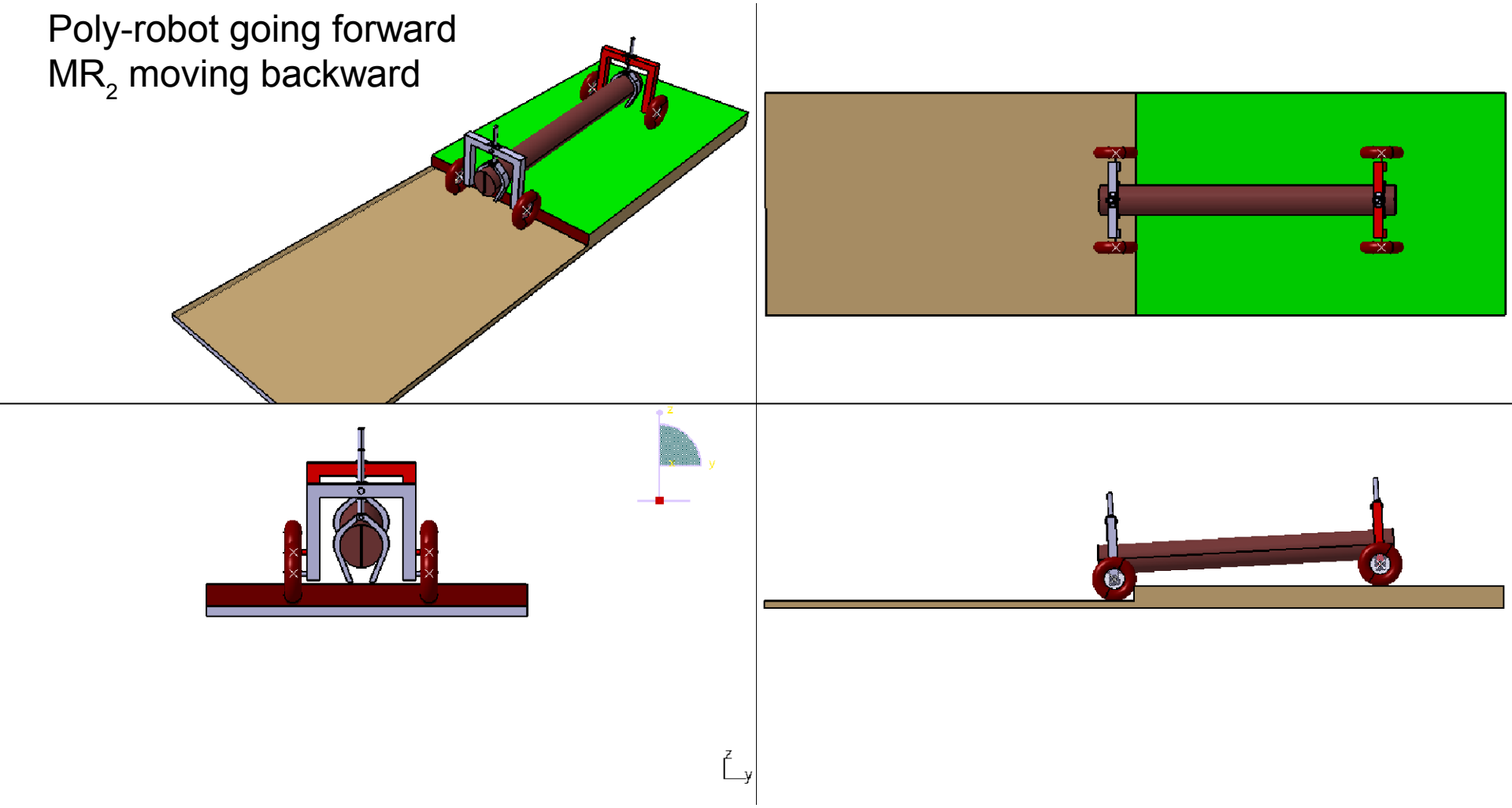

Krid / Fauroux / Bouzgarrou
IFMA / Institut Pascal

2 axles: 3D serpentine crossing mode
Stage 11 - $PW_{21}M_{01}$

W_{21} stabilization
by MR_1 combined $T_X + R_Z$

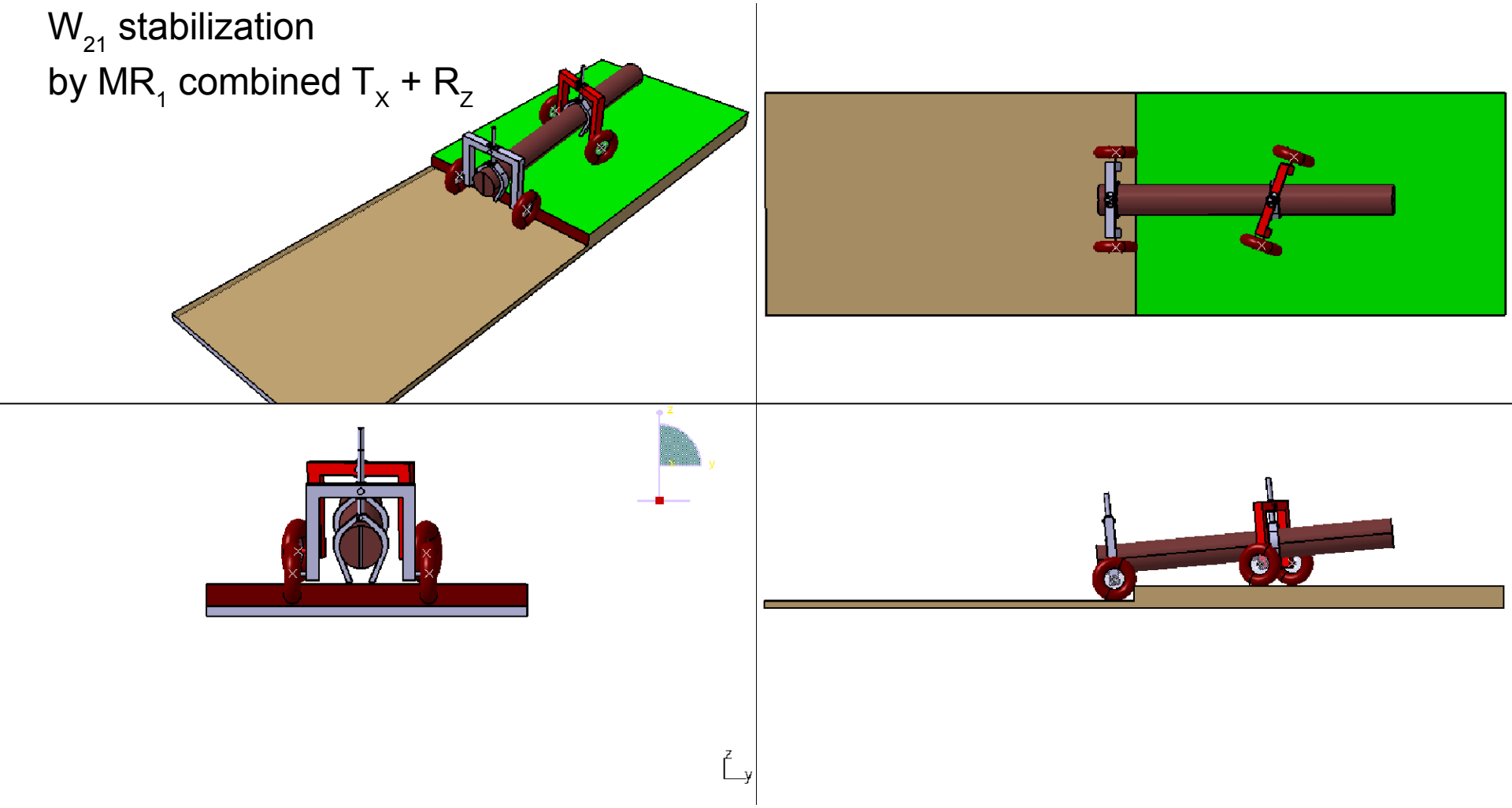

Krid / Fauroux / Bouzgarrou
IFMA / Institut Pascal

2 axles: 3D serpentine crossing mode
Stage 12 - $PW_{21}M_{02}$

W_{21} T_{Z+}

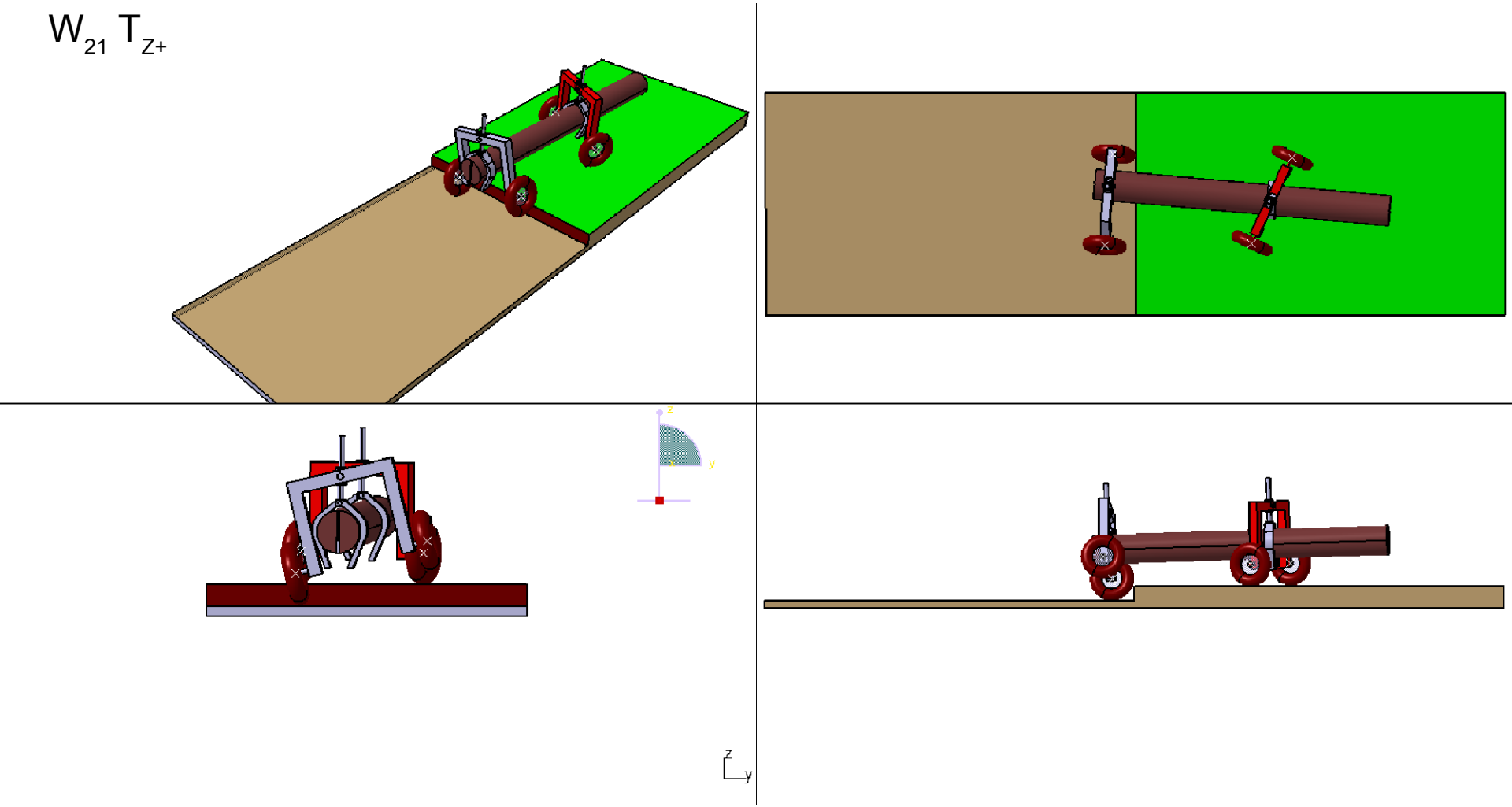

Krid / Fauroux / Bouzgarrou
IFMA / Institut Pascal

2 axles: 3D serpentine crossing mode
Stage 13 - $PW_{21}M_{03}$

W_{21} T_X

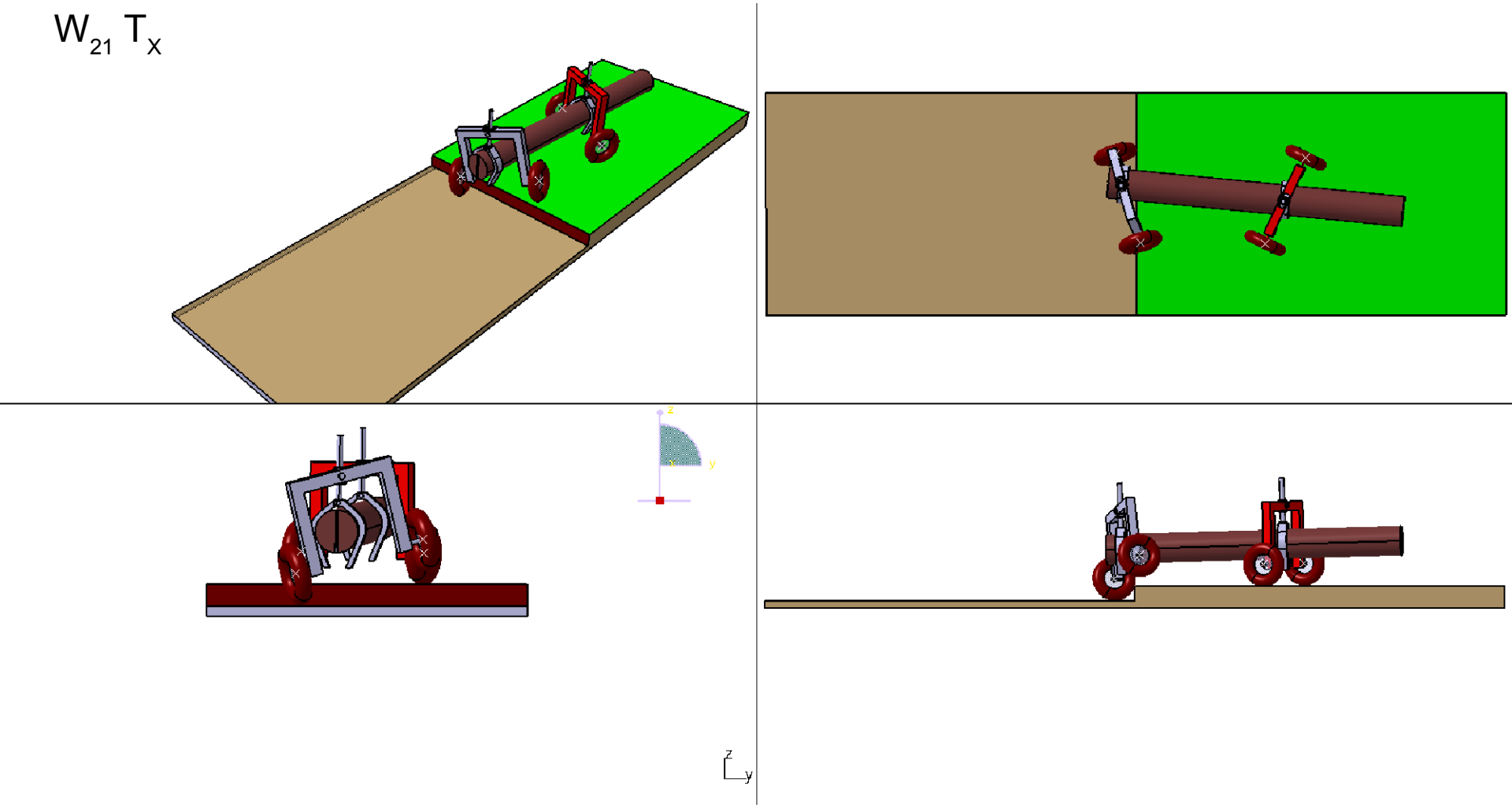

Krid / Fauroux / Bouzgarrou
IFMA / Institut Pascal

2 axles: 3D serpentine crossing mode
Stage 14 - $PW_{21}M_{04}$

W_{21} T_{Z-}

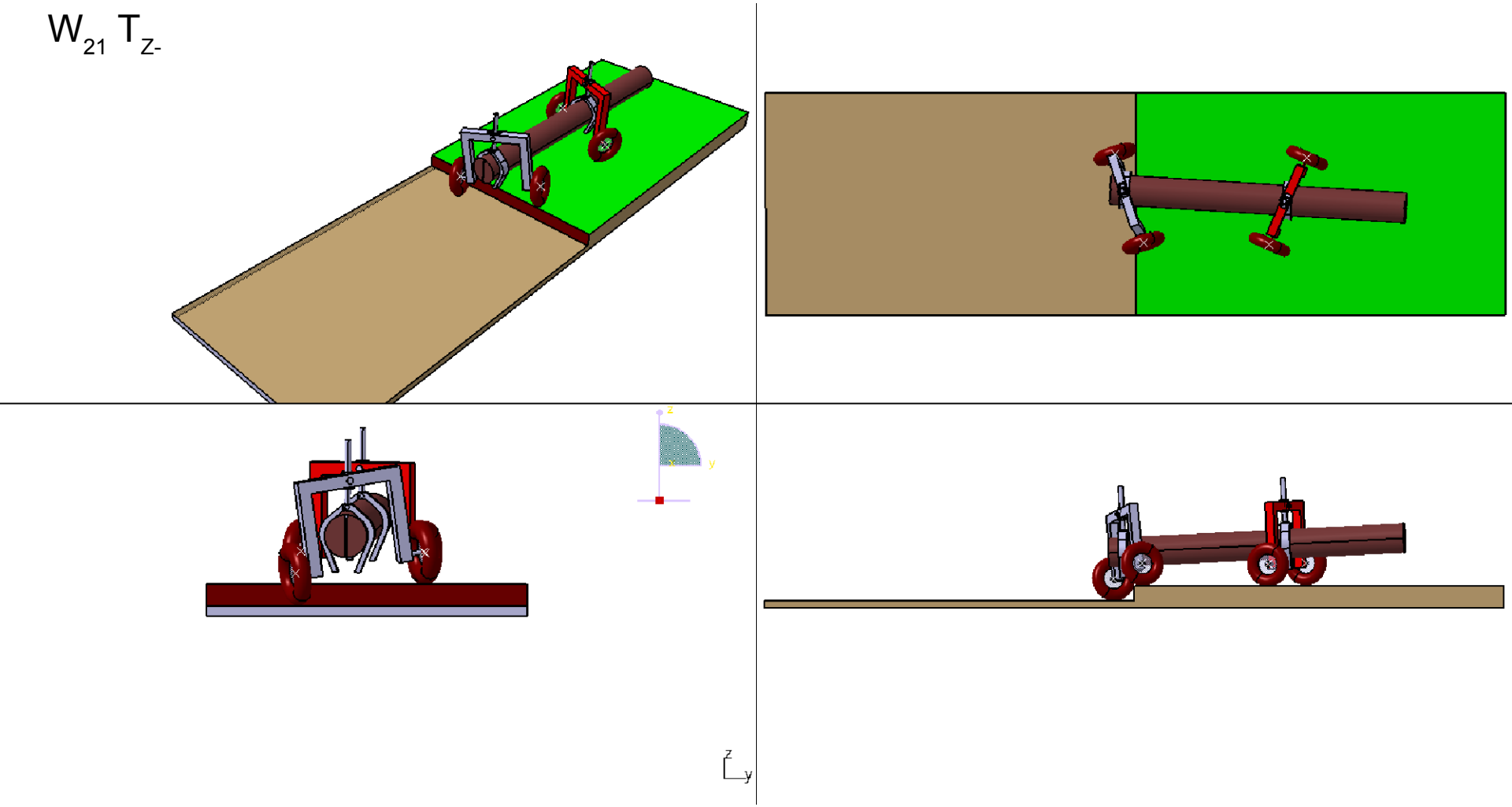

Krid / Fauroux / Bouzgarrou
IFMA / Institut Pascal

2 axles: 3D serpentine crossing mode
Stage 15 - $PW_{22}M_{01}$

W_{22} stabilization
by MR_1 rotation R_Z

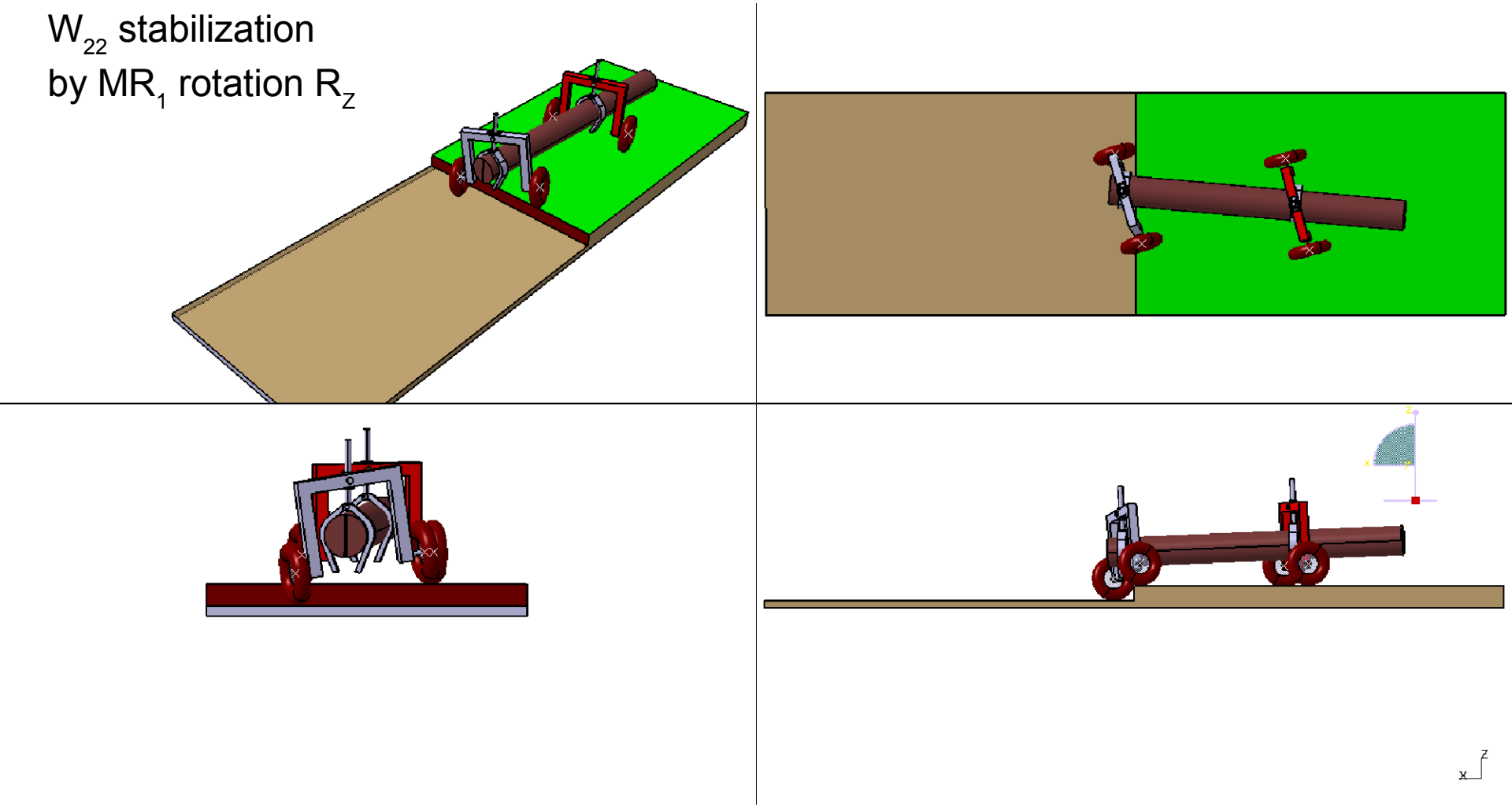

Krid / Fauroux / Bouzgarrou
IFMA / Institut Pascal

2 axles: 3D serpentine crossing mode
Stage 16 - $PW_{22}M_{02}$

W_{22} T_{Z+}

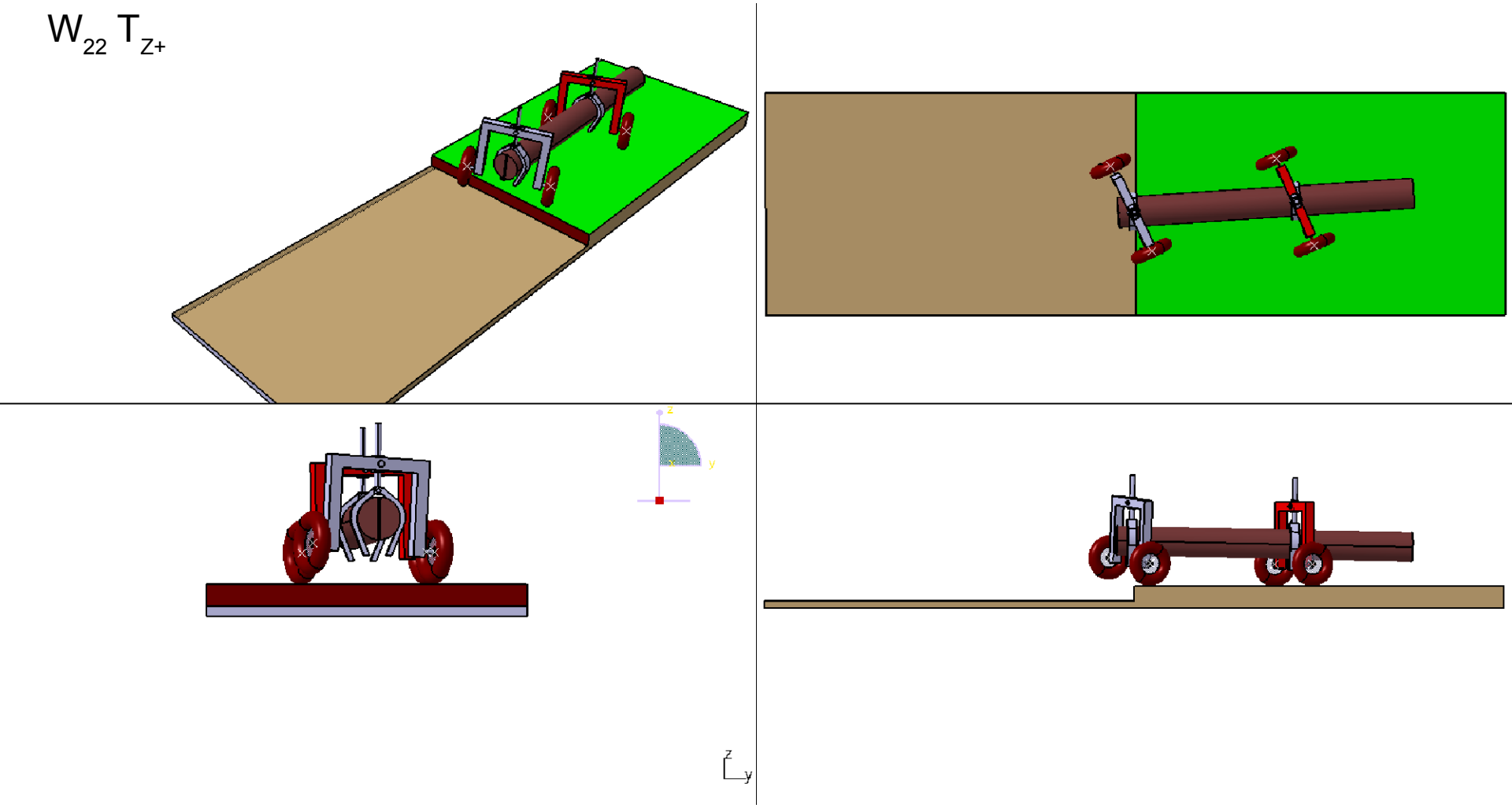

Krid / Fauroux / Bouzgarrou
IFMA / Institut Pascal

2 axles: 3D serpentine crossing mode
Stage 17 - $PW_{22}M_{03}$

W_{22} T_X

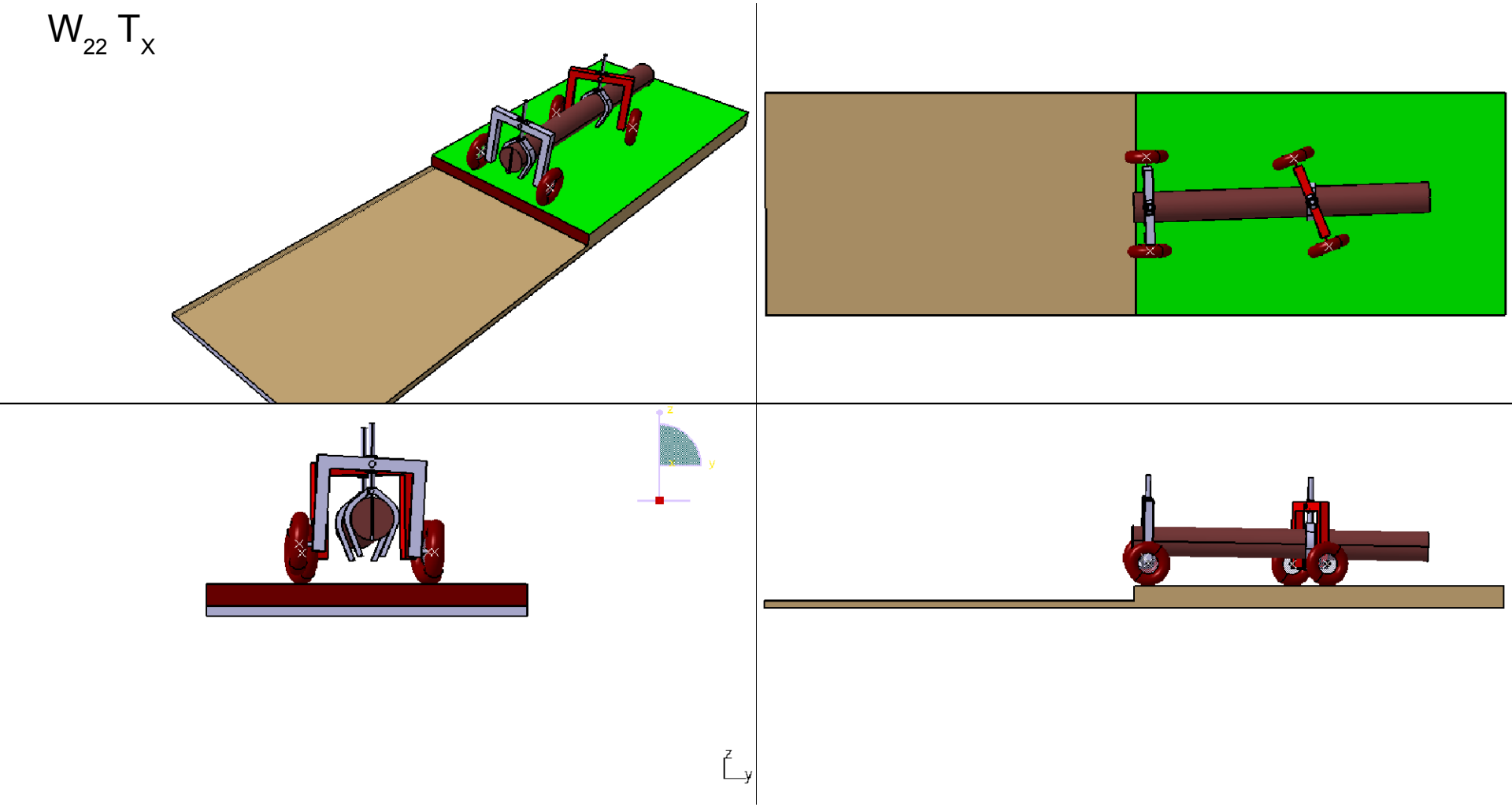

Krid / Fauroux / Bouzgarrou
IFMA / Institut Pascal

2 axles: 3D serpentine crossing mode
Stage 18 - $PW_{22}M_{04}$

W_{22} T_{Z-}

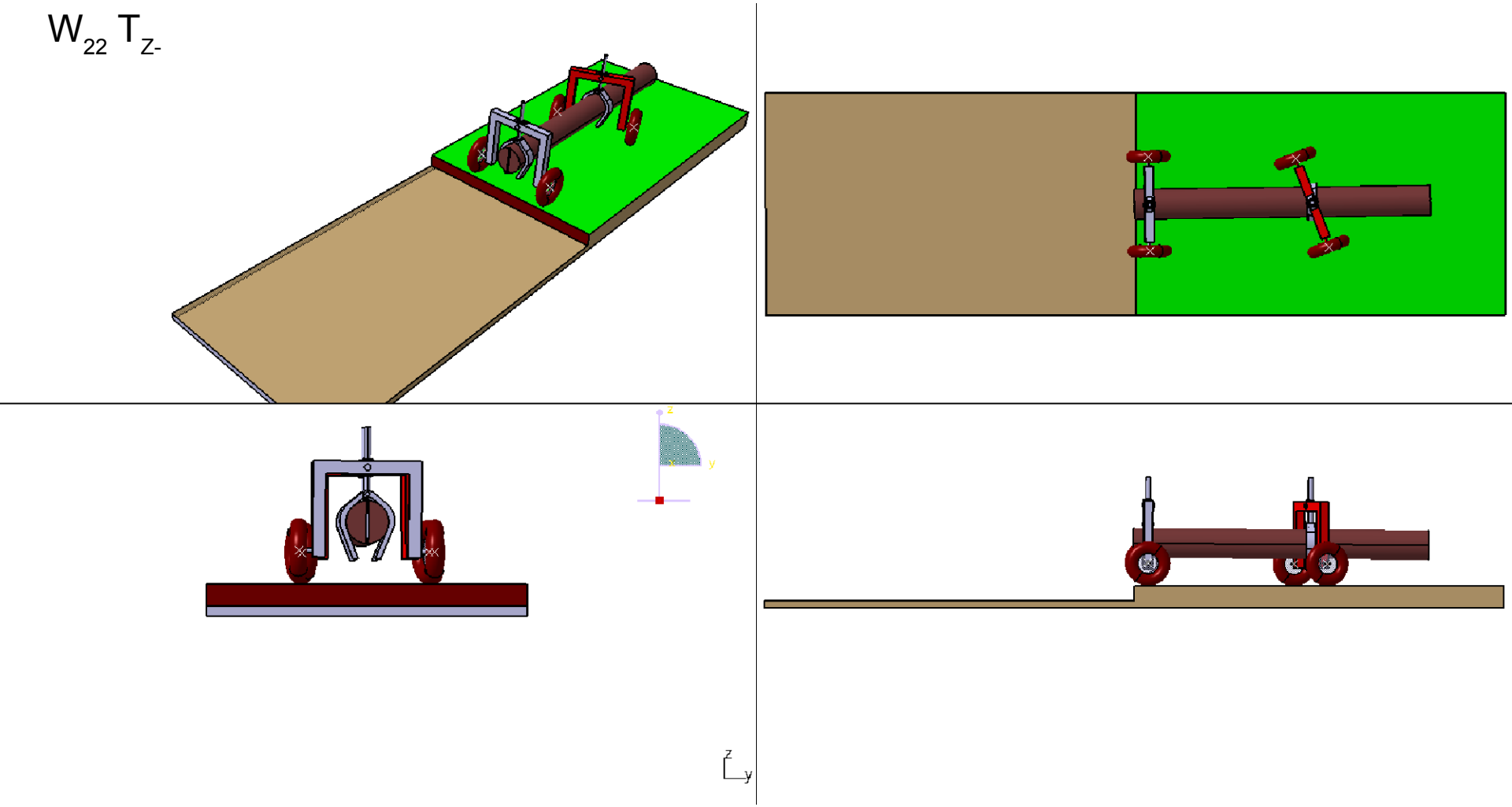

Krid / Fauroux / Bouzgarrou
IFMA / Institut Pascal

2 axles: 3D serpentine crossing mode
Stage 19

MR_1 final reconfiguration by T_X R_Z

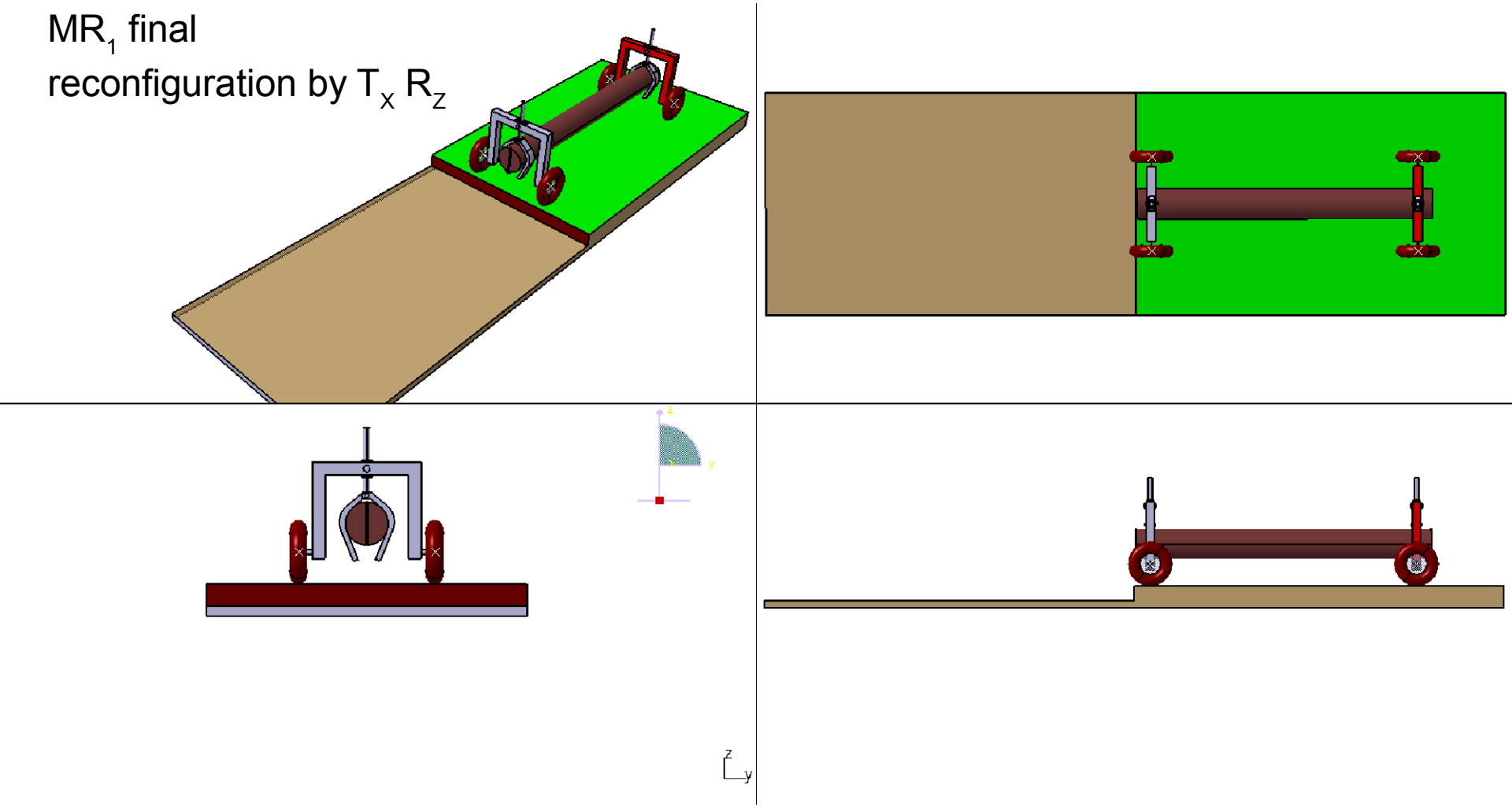

Krid / Fauroux / Bouzgarrou
IFMA / Institut Pascal

Conclusion

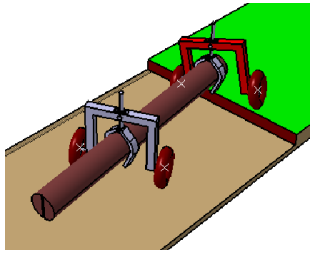

C³Bots = Collaborative Cross & Carry Mobile RoBots

- C³Bots
- Kinematics
- Locomotion
- Conclusion

Conclusion

- ✔ Topic: transporting long payloads in unstructured environments with collaborative mono-robots
- ✔ Problem reformulation to extract the **four required mobilities (T_x, R_x, T_z, R_z)**
- ✔ Several **new** corresponding **kinematics**
- ✔ Kinematical **conciseness**
- ✔ **Two locomotion modes** for obstacle-crossing
  - ✔ For 3 axles and more: 2D mode
  - ✔ For 2 axles: a 3D serpentine mode
- ✔ The C³Bots AT/VLP kinematics have been **patented**

[9] **PAT14** Jean-Christophe FAUROUX, Belhassen-Chedli BOUZGARROU and Mohamed KRID, « Unité robotique de transport de charges longues », Brevet français N°14/51661, 28 février 2014, 29p.

Future work

- ✔ A **new stability margin** developed for stability on 3 wheels
- ✔ **Maximization of the stability margin** along the locomotion stages
- ✔ Both **structural** and **joint** variables can be simultaneously optimized