Dynamic Obstacle-Crossing of a Wheeled Rover with Double-Wishbone Suspension

Jean-Christophe.Fauroux@ifma.fr
Belhassen-Chedli.Bouzgarrou@ifma.fr

Clermont University
French Institute for Advanced Mechanics (**IFMA**)

EA3867, FR **TIMS** / **CNRS** 2856
Mechanical Engineering Research Group (**LaMI**)

BP 10448, F-63000, FRANCE

University Pierre et Marie Curie, Paris, France

14th International Conference on Climbing and Walking Robots

6 - 8 september 2011

CLAWAR 2011

All-terrain robots

Dynamic Obstacle Crossing

- All-terrain
  - Market
  - FAST
  - Goals
- Experiment
- Model
- Conclusion

- Most of existing commercial all-terrain mobile robots are **slow** (< 3-5m/s)
  - ✔ Low speed allows **special modes of locomotion** such as obstacle climbing modes for de-mining or industrial inspection
  - ✔ Low speed is also suitable for home use / gaming

PackBot 510 (iRobot)
89cm, 11kg, 2.6m/s
www.irobot.com

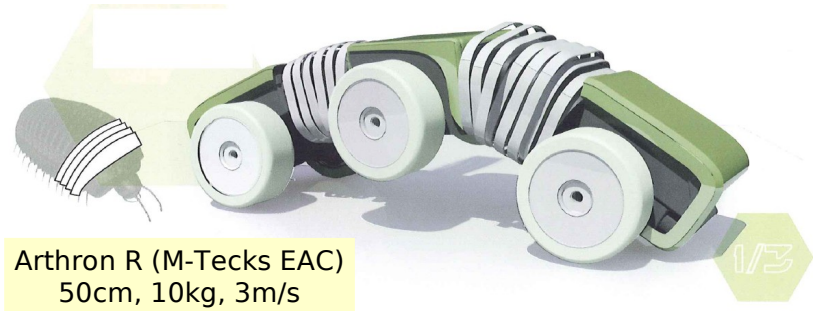

Arthron R (M-Tecks EAC)
50cm, 10kg, 3m/s
www.m-teckseac.com

robuCAR TT (Robosoft)
2m, 350kg, 5m/s
www.robosoft.com

Speekee (Meccano)
30cm, 3.5kg, 0.3m/s
www.spykeeworld.com

Fast all-terrain robots

Dynamic Obstacle Crossing

- All-terrain
  - Market
  - FAST
  - Goals
- Experiment
- Model
- Conclusion

- Many outside applications could benefit from **high speed** (more than 10m/s)
  - ✔ **Inspection** of vast areas such as airports or industrial facilities
  - ✔ Fast robots → less robots that are more dissuasive
  - ✔ Terrestrial drones : safer + larger autonomy than aerial drones
  - ✔ **Agriculture** : weeding, seeding
  - ✔ Casualty detection in case of **disaster**

Airport facilities (Toulouse-Blagnac airport and Airbus facilities)

Inspection task after Fukushima disaster, 2011 (Photo : BBC)

Fast obstacle-crossing

Dynamic Obstacle Crossing

- All-terrain
  - Market
  - FAST
  - Goals
- Experiment
- Model
- Conclusion

- How to manage obstacle-crossing at **high speed** ?
- Few work relate to the **frontal crash** on an obstacle
  - ✔ Robots thrown above obstacles

Star-configured suspension
D. O'Halloran, A. Wolf and H. Choset. Design of a high-impact survivable robot. *Mechanism and Machine Theory.* **40**, 1345–1366 (2005)

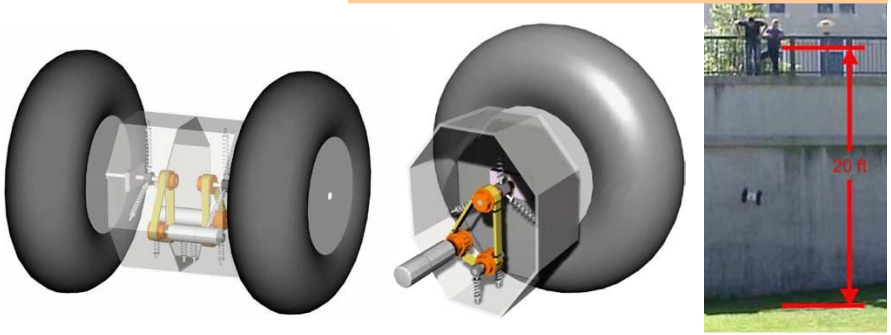

DragonRunner, an ultra-rugged portable reconnaissance robot
→ no suspension
http://www.rec.ri.cmu.edu/projects/dragonrunner

  - ✔ Crash study based on non-linear FEM
  - ✔ Experiments on a pick-up (2 tons)

Crash pick-up / concrete barrier
Gary R. Consolazio, Jae H. Chung, Kurtis R. Gurley. Impact simulation and full scale crash testing of a low profile concrete work zone barrier. *Computers and Structures.* **81,** 1359–1374 (2003)

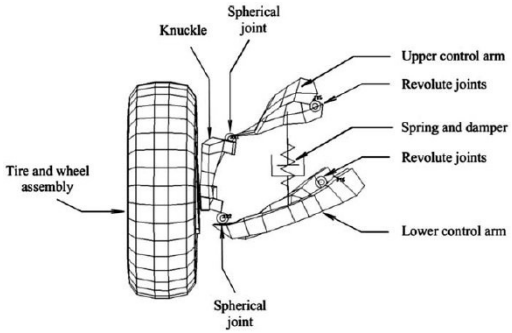

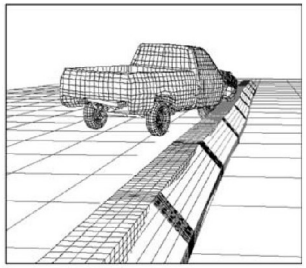

The ANR FAST Project

Dynamic Obstacle Crossing

- All-terrain
  - Market
  - FAST
  - Goals
- Experiment
- Model
- Conclusion

- **FAST** project (**F**ast **A**utonomous Rover **S**ys**T**em)
  - ✔ Funded by the French **N**ational **A**gency for **R**esearch (ANR) 2007-2011
  - ✔ General goal : design an autonomous mobile robot capable to **safely move at 10m/s on all-terrain**
  - ✔ Team : TIMS, ISIR, LAAS, robosoft
  - ✔ Scientific objective (among others) : mechatronics design of a **dynamically auto-stable robot**
  - ✔ Problem specifications :

- Unstructured natural environment
- Vehicle scale : from 0.3m to 2.5m
- Speed > 10m/s
- Obstacles

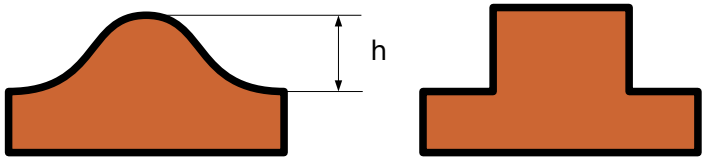

C^1 obstacle C^0 obstacle

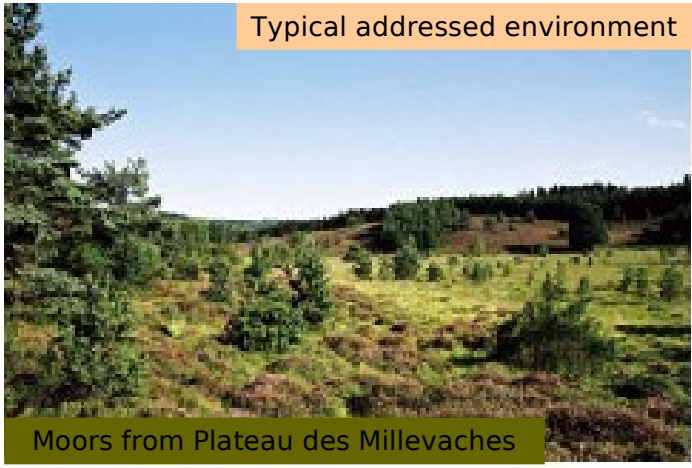

Typical addressed environment

Moors from Plateau des Millevaches

Experimenting

Dynamic Obstacle Crossing

- All-terrain
- Experiment
  - Vehicle
  - Obstacle
  - Speed
  - Force
  - Results
- Model
- Conclusion

- First, an experimental approach of obstacle-crossing
  - ✔ Complex phenomena : non-linear fast crash of deformable mechanisms with friction and sliding
  - ✔ Experimenting allows to evaluate the most suitable laws to introduce in a simplified model, that will be presented in Part 3
- Choosing a mobile platform
  - ✔ A fast & robust vehicle
  - ✔ Small scale decreases the repair cost
  - ✔ Easy to tip-over

E-Maxx electric model
#3903 (Traxxas)
www.traxxas.com

Vehicle	E-Maxx
Mass	5.16 kg
L x l x h	518 x 419 x 242 mm
Wheelbase	335 mm
Track width	330 mm
Centre of mass	Centred
Wheel diameter	150 mm
Transmission	4x4
Max speed	14 m/s

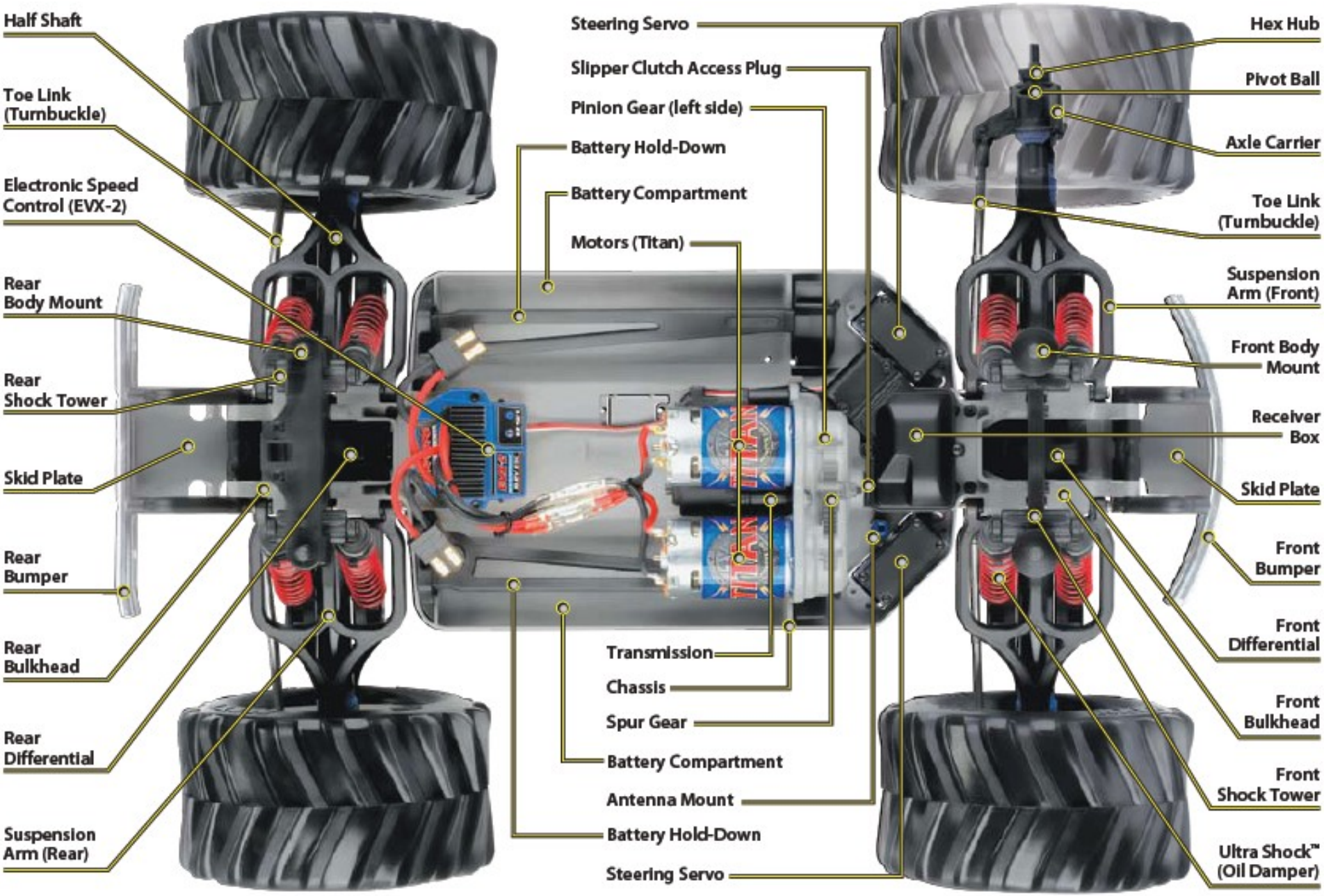
Half Shaft
Toe Link (Turnbuckle)
Electronic Speed Control (EVX-2)
Rear Body Mount
Rear Shock Tower
Skid Plate
Rear Bumper
Rear Bulkhead
Rear Differential
Suspension Arm (Rear)
Steering Servo
Slipper Clutch Access Plug
Pinion Gear (left side)
Battery Hold-Down
Battery Compartment
Motors (Titan)
Transmission
Chassis
Spur Gear
Battery Compartment
Antenna Mount
Battery Hold-Down
Steering Servo
Hex Hub
Pivot Ball
Axle Carrier
Toe Link (Turnbuckle)
Suspension Arm (Front)
Front Body Mount
Receiver Box
Skid Plate
Front Bumper
Front Differential
Front Bulkhead
Front Shock Tower
Ultra Shock™ (Oil Damper)

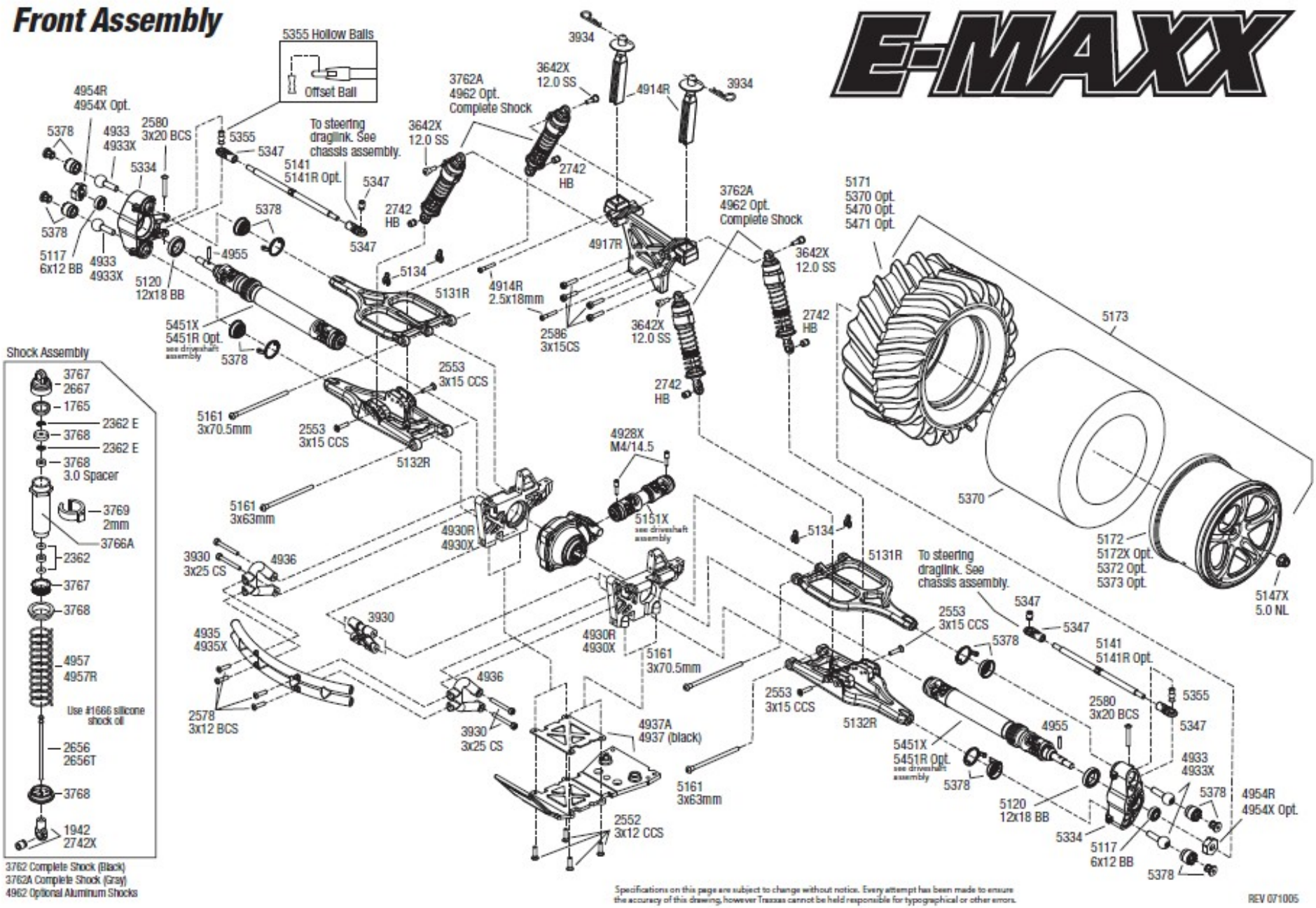
Front Assembly
E-MAXX
5355 Hollow Balls
Offset Ball
3934
3642X 12.0 SS
4914R
3934
3762A 4962 Opt. Complete Shock
4954R 4954X Opt.
5378
4933 4933X
2580 3x20 BCS
5355
5347
To steering draglink. See chassis assembly.
3642X 12.0 SS
5141 5141R Opt.
5334
5347
2742 HB
5378
2742 HB
5378
5347
5117 6x12 BB
4933 4933X
4955
5134
4917R
3762A 4962 Opt. Complete Shock
5171 5370 Opt. 5470 Opt. 5471 Opt.
3642X 12.0 SS
5120 12x18 BB
5131R
4914R 2.5x18mm
2586 3x15CS
3642X 12.0 SS
2742 HB
5173
5451X 5451R Opt. see driveshaft assembly
5378
2553 3x15 CCS
2742 HB
Shock Assembly
3767
2667
1765
2362 E
3768
2362 E
3768 3.0 Spacer
3769 2mm
3766A
2362
3767
3768
4957 4957R
Use #1666 silicone shock oil
2656 2656T
3768
1942 2742X
3762 Complete Shock (Black)
3762A Complete Shock (Gray)
4962 Optional Aluminum Shocks
5161 3x70.5mm
2553 3x15 CCS
5132R
4928X M4/14.5
5161 3x63mm
5151X see driveshaft assembly
5370
4930R 4930X
5134
5131R
To steering draglink. See chassis assembly.
5172 5172X Opt. 5372 Opt. 5373 Opt.
5147X 5.0 NL
3930 3x25 CS
4936
5347
2553 3x15 CCS
5347
3930
5378
5141 5141R Opt.
4935 4935X
4930R 4930X
5161 3x70.5mm
4936
2553 3x15 CCS
5355
2580 3x20 BCS
2578 3x12 BCS
3930 3x25 CS
4937A 4937 (black)
5132R
4955
5347
5451X 5451R Opt. see driveshaft assembly
4933 4933X
5161 3x63mm
5378
5378
4954R 4954X Opt.
5120 12x18 BB
2552 3x12 CCS
5334
5117 6x12 BB
5378
Specifications on this page are subject to change without notice. Every attempt has been made to ensure the accuracy of this drawing, however Traxxas cannot be held responsible for typographical or other errors.
REV 071005

Experimental obstacle

Dynamic Obstacle Crossing

- All-terrain
- Experiment
  - Vehicle
  - Obstacle
  - Speed
  - Force
  - Results
- Model
- Conclusion

- Adjustable C^0 obstacle
  - ✔ Steel bar adjustable in height h
  - ✔ Includes force measurement devices (Kistler 9257B)

C^0 obstacle

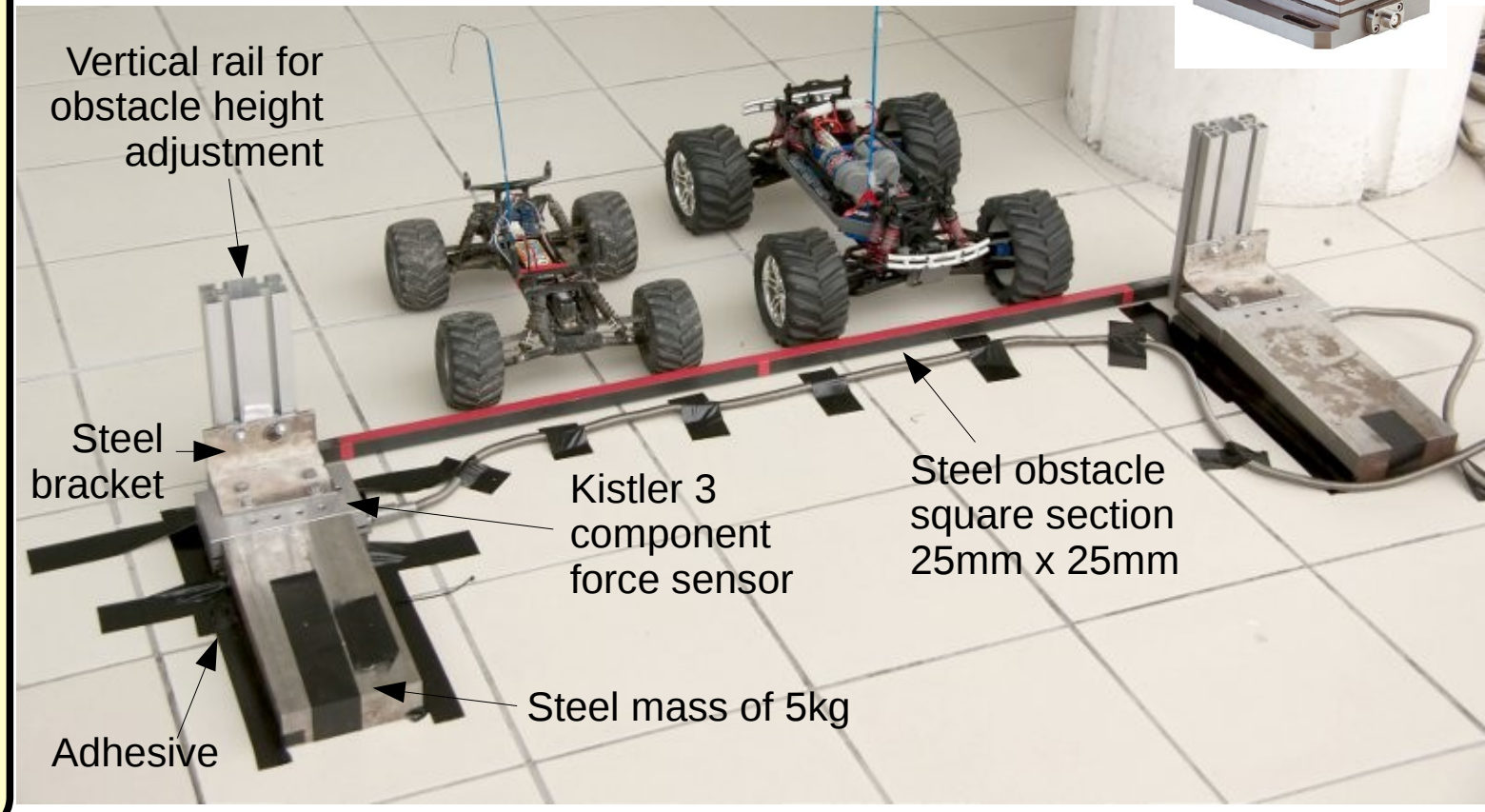

Speed measurement

Dynamic Obstacle Crossing

- All-terrain
- Experiment
  - Vehicle
  - Obstacle
  - Speed
  - Force
  - Results
- Model
- Conclusion

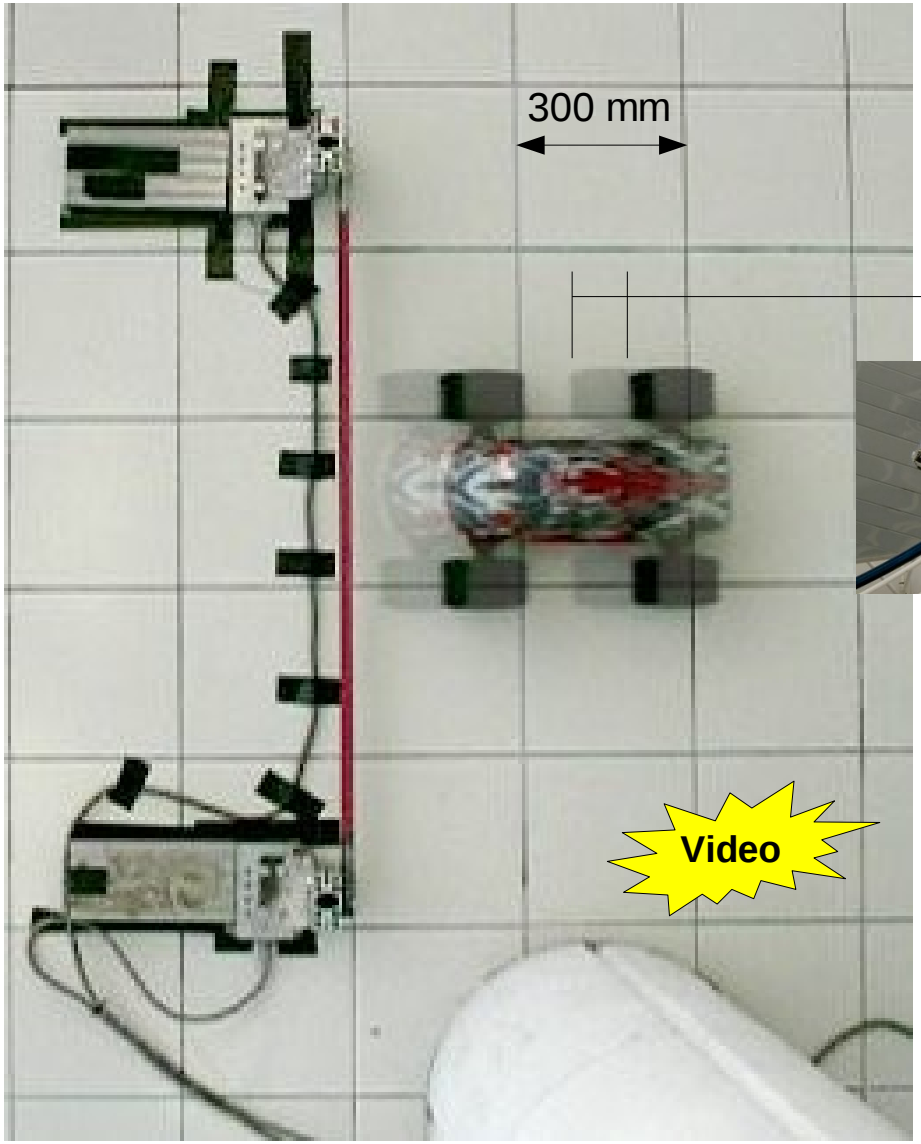

Distance ran in 1/30th of second (30Hz camera)

- Speed measured by vision
  - ✔ 30 Hz camera located on top of the impact zone
  - ✔ Tiled floor with periodic pattern of 300mm
  - ✔ Instantaneous speed comes from the 2 last images before impact

Force measurement

Dynamic Obstacle Crossing

- All-terrain
- Experiment
  - Vehicle
  - Obstacle
  - Speed
  - Force
  - Results
- Model
- Conclusion

- 3 DOF force-plate

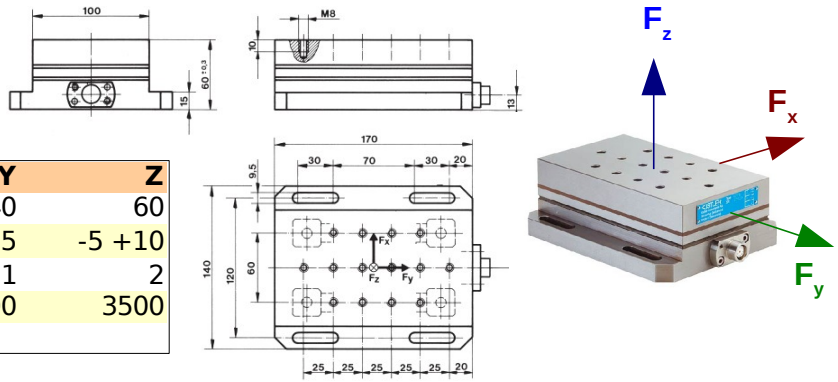

Parameter	X	Y	Z
Dimensions (mm)	170	140	60
Force range (kN)	-5 +5	-5 +5	-5 +10
Stiffness (kN/µm)	1	1	2
Natural frequency (Hz)	2300	2300	3500
Mass (kg)	7,3		

- ✔ Acquisition 1kHz

- Results
  - ✔ Impact force increases with obstacle height
  - ✔ Peaks of 400N
  - ✔ $F_x \approx F_z$ for v=8m/s and h=65mm
  - ✔ Need for a **horizontal component of suspension**

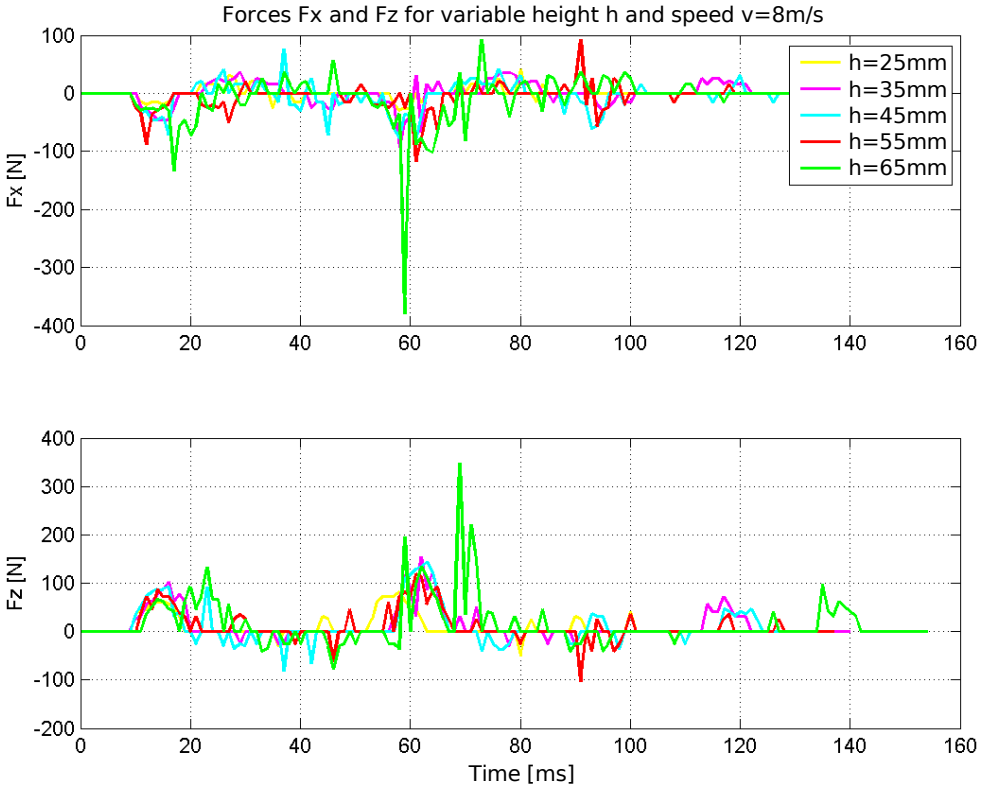

Design of experiment (DoE)

Dynamic Obstacle Crossing

- All-terrain
- Experiment
  - Vehicle
  - Obstacle
  - Speed
  - Force
  - Results
- Model
- Conclusion

- Summary of 77 experiments (h:25→75mm,v:3→8m/s)
  - ✔ High obstacles → crash by tip-over (red dots)
  - ✔ A **stability front** (red line) separates experiment with / without tip-over
  - ✔ The front has a **decreasing non-linear** shape
  - ✔ Future suspension with 2 DOF will **enhance stability** zone (green line)

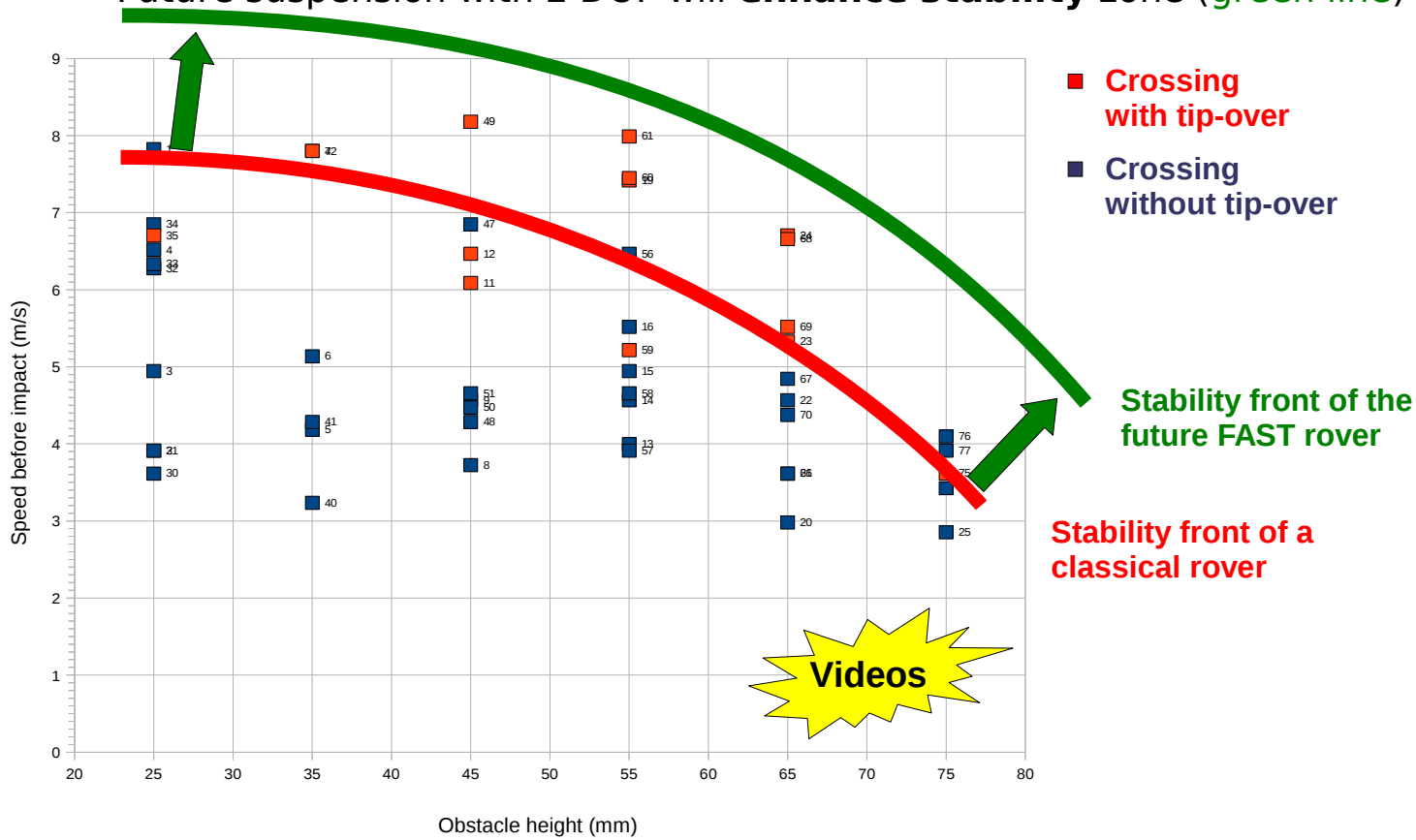

Simple analytical model

Dynamic Obstacle Crossing

- All-terrain
- Experiment
- Model
  - Parameters
  - Motion eq.
  - Contact
  - Results
- Conclusion

- Frontal crossing configuration → 2D model
  - ✔ **3 rigid bodies** : 2 wheel and the chassis → 9 DOFs
  - ✔ Wheel / chassis **suspension forces** → vertical and longitudinal linear spring-dampers
  - ✔ Wheel / ground **contact forces** → a new formula is proposed
  - ✔ Wheel / obstacle **impact force** → linear spring-damper in function of penetration

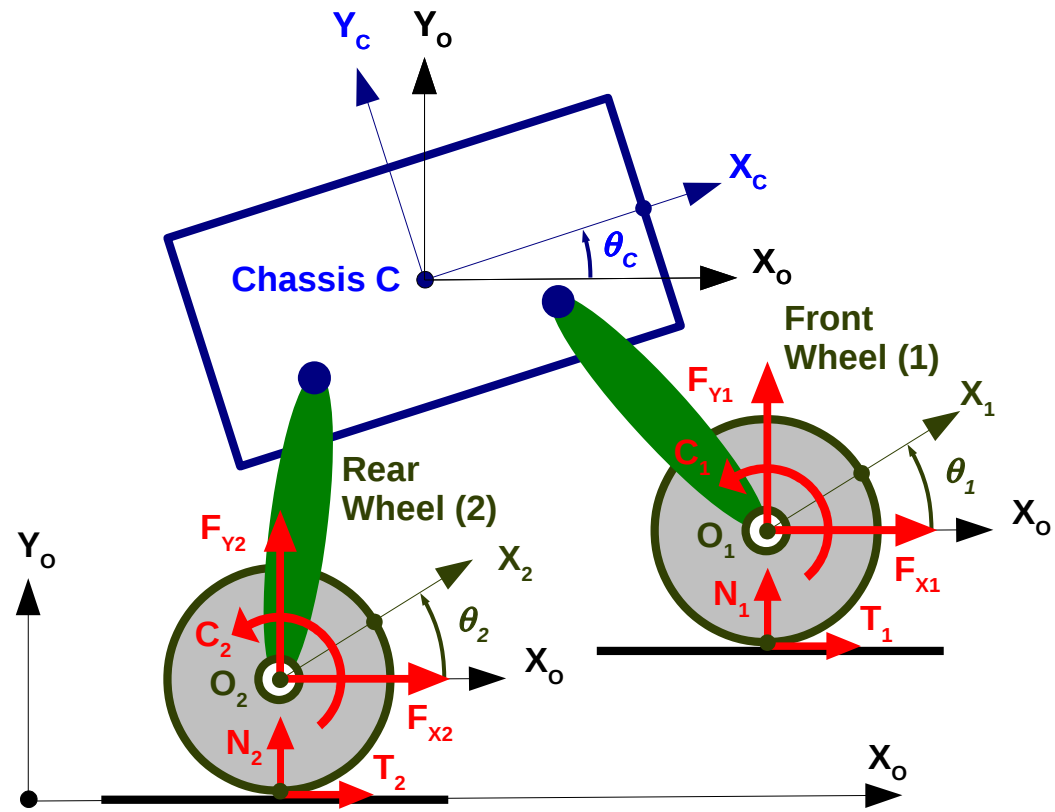

Equations of motion

- Newton-Euler equations

✔ Chassis equations

$$m_c \ddot{X}_c = F_{x1} + F_{x2}$$

$$m_c \ddot{Y}_c = F_{y1} + F_{y2} - m_c g$$

$$I_{cz} \ddot{\theta}_c = M_1 + M_2 - C_1 - C_2$$

✔ Wheel equations

$$m_i \ddot{X}_i = T_i + R_{xi} - F_{xi}$$

$$m_i \ddot{Y}_i = N_i + R_{yi} - F_{yi} - m_i g$$

$$I_{zi} \ddot{\theta}_i = C_i + rT_i$$

- Longi. suspension forces
- Vertical suspension forces
- Contact / impact forces
- Motor torques
- Suspension moments
- Gravity forces

Wheel-ground contact

Dynamic Obstacle Crossing

- All-terrain
- Experiment
- Model
  - Parameters
  - Motion eq.
  - Contact
  - Results
- Conclusion

- Normal force
  - ✔ Linear spring damper model

$$N_i = \begin{cases} k(r - Y_i) - c\dot{Y}_i & (Y_i \le r) \\ 0 & (Y_i > r) \end{cases}$$

- Tangential force
  - ✔ Novel formula valid for :
    - dynamic and static cases (Ci=0)
    - with and without slipping (gr=0)

$$T_i = N_i \min\left(g_r\,\mu - (1 - g_r)\,\frac{C_i}{r\,N_i},\; g_r\,\mu \right)$$

$$\text{with slipping} \quad g_r = \frac{-r\dot{\theta}_i - \dot{X}_i}{\max\left(\left|r\,\dot{\theta}_i\right|, \left|\dot{X}_i\right|\right)}$$

- Impact forces
  - ✔ Unilateral linear spring-damper force in function of penetration (e)
  - ✔ Experimental analysis with high speed camera at 10kHz

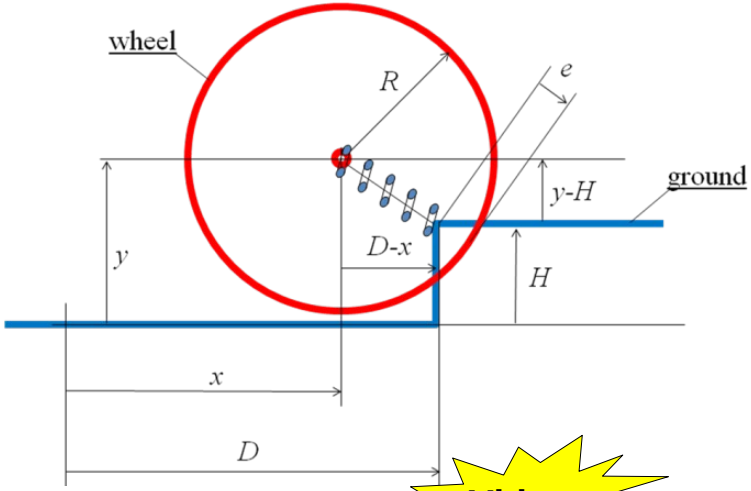

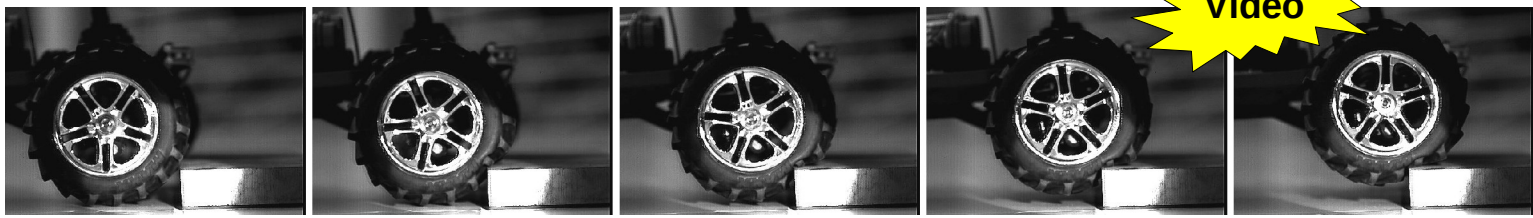

Simulation results and DoE

Dynamic Obstacle Crossing

- All-terrain
- Experiment
- Model
  - Parameters
  - Motion eq.
  - Contact
  - Results
- Conclusion

- Simulation of frontal obstacle-crossing
  - ✔ Solving of the analytical equations with Matlab

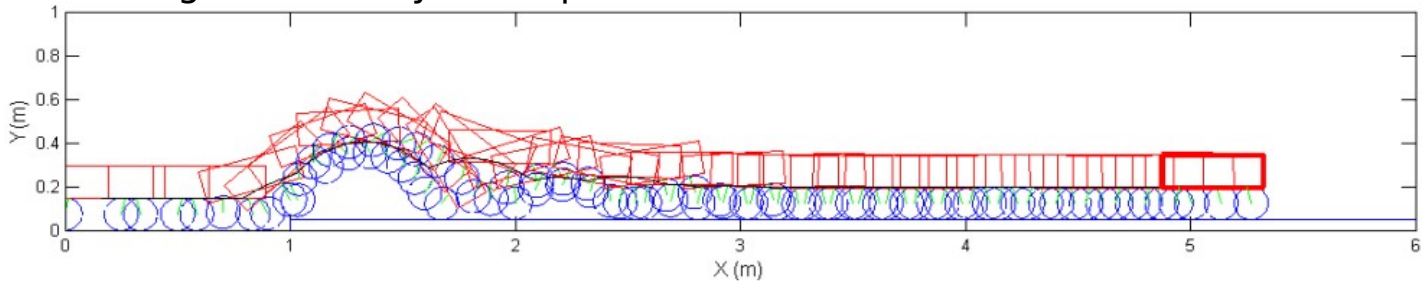

  - ✔ Design of Experiments with 100 experiments (h:7→75mm,v:1→10m/s)

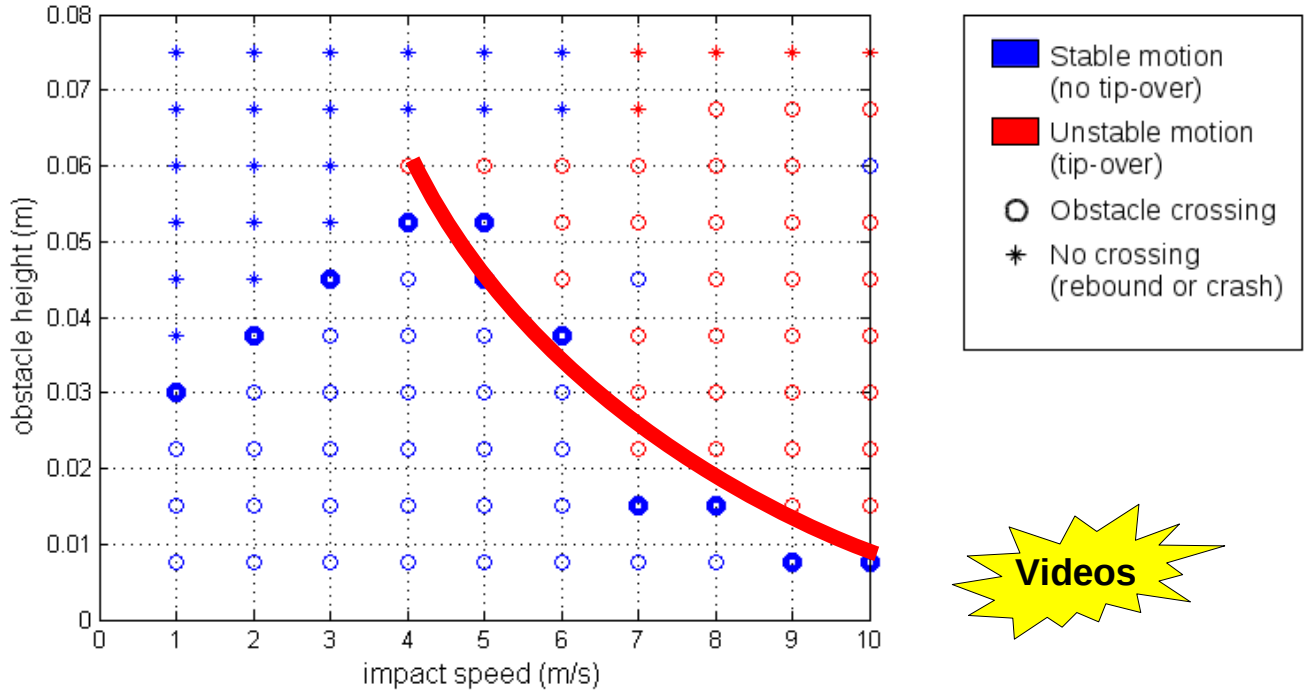

Videos

Conclusion

Dynamic Obstacle Crossing

- All-terrain
- Experiment
- Model
- Conclusion
  - Overview
  - Future work

Experimental part

- ✔ **77 experiments** with an electric vehicle at scale 1/10
- ✔ Wheel r: 75mm, Obstacle h: 25→75mm, Speed v: 3→8m/s
- ✔ It exists a **tip-over stability limit** f(h,v)=cte with f a **decreasing non-linear** stability frontier
- ✔ The vehicle can cross
  - low obstacles at high speed
  - high obstacles at low speed

Analytical model

- ✔ **2D model** based on **dynamics** and **contact** equations
- ✔ **Design of Experiments** with 100 experiments
- ✔ Close agreement with the **decreasing tip-over stability limit**

Impact forces

- ✔ Measurement of impact forces
- ✔ $\mathbf{F_x}$ is as high as $\mathbf{F_z}$ and should be damped also

Future work

Dynamic Obstacle Crossing

- All-terrain
- Experiment
- Model
- Conclusion
  - Overview
  - Future work

- A suspension with 2 DOF
  - ✔ The authors have shown [HUDEM 2010] that a **horizontal DOF** in the suspensions could benefit to longitudinal stability

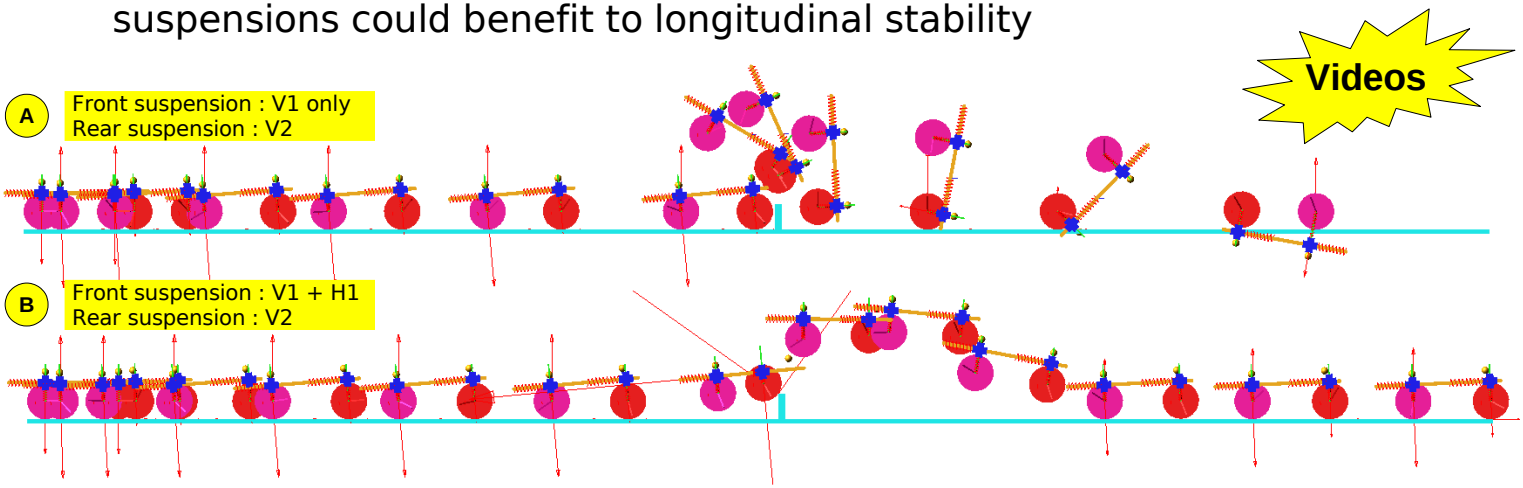

  - ✔ An innovative suspension with 2 DOF based on a **parallel mechanism** has been designed and is under **patent** process
  - ✔ Analysis with **high speed camera**

- Analytical model
  - ✔ Refining the **impact model** by adding a **non-constant stiffness**
  - ✔ Analytical expression of the **stability frontier**
  - ✔ **Optimization** of front/rear and horizontal/vertical **stiffness** and **damping** coefficients
  - ✔ **Control strategy** for optimal obstacle crossing