Charles **CORRADINI**
Jean-Christophe **FAUROUX**
IFMA/LaRAMA, Clermont-Ferrand, France

Laboratoire de Recherches et Applications en Mécanique Avancée

Olivier **COMPANY**
Sébastien **KRUT**
LIRMM/CNRS, Montpellier, France

Laboratoire d'Informatique de Robotique et de Microélectronique de Montpellier
LIRMM

Evaluation of a 4-Degree of Freedom Parallel Manipulator Stiffness

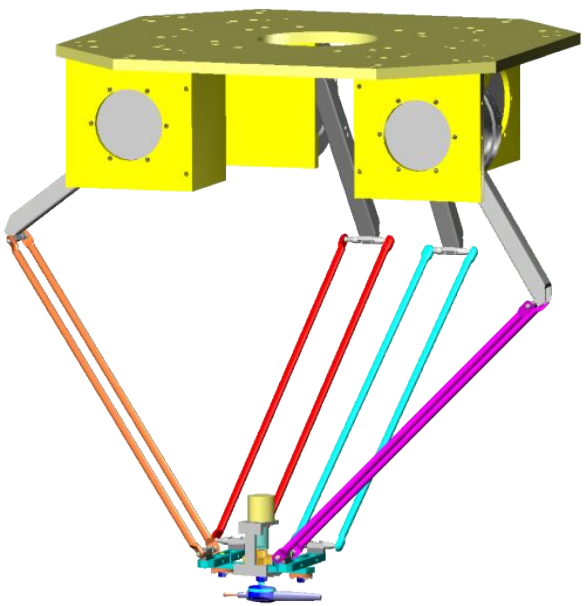

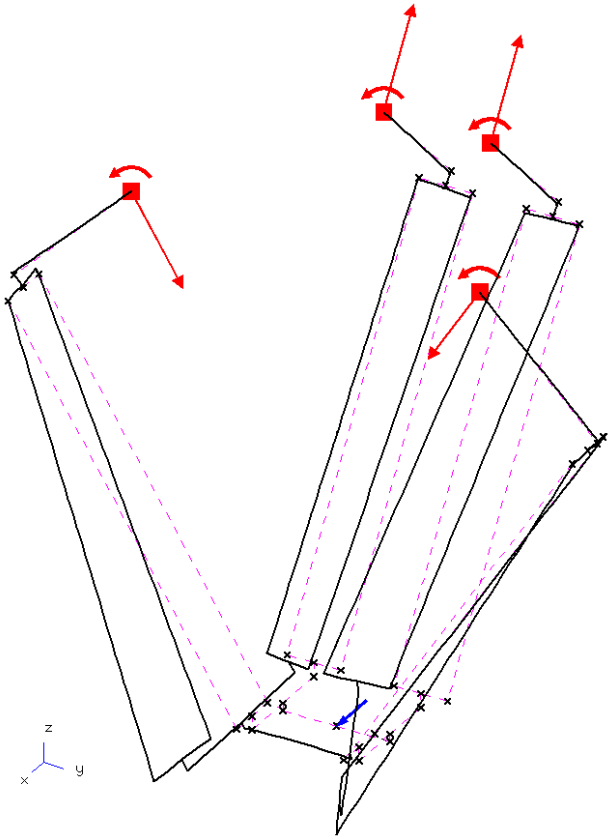

11th World Congress in Mechanism and Machine Science

April 1-4, 2004
Tianjin, China

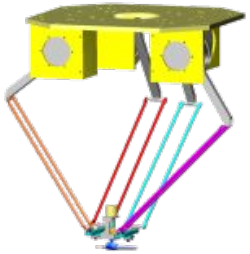

Introducing H4 parallel robot

- H4, a robot built at LIRMM/CNRS
- Parallel architecture with four legs
- 4 DDF : 3 translations, 1 rotation
- Advantages :
  - Accelerations up to 10 g
  - Ideal for « pick and place » operations
- H4 prototype must be optimized
- Re-design for stiffness
  - Long arms
  - Stiffness for improving accuracy
- Partnership with LaRAMA / IFMA
- In ROBEA Max CNRS program

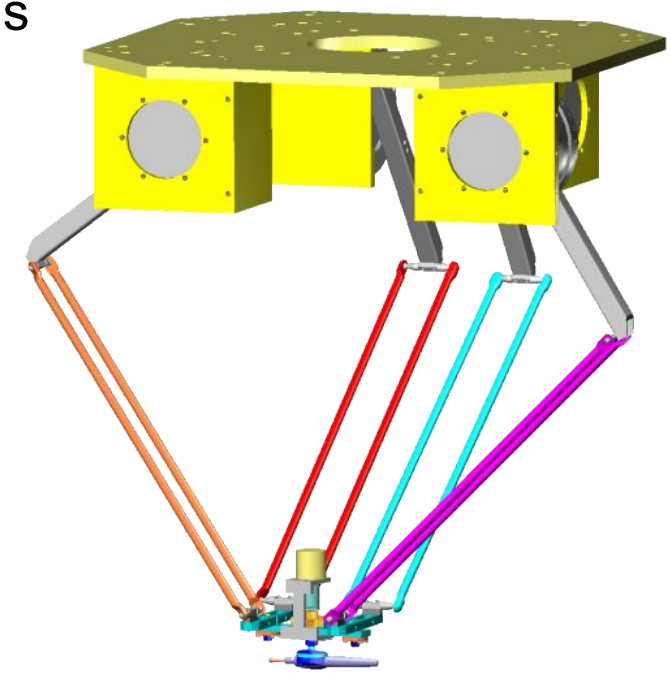

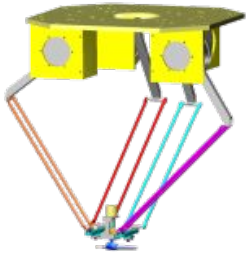

H4 kinematics

- 6R and 16S joints
- 4 DDF : 3 translations, 1 rotation
- Architecture with 4 legs R-(S-S)$_2$ = actuator + forearm + 2 bars
- Spatial parallelograms (S-S)$_2$ plane in normal conditions
- 4 rotative actuators

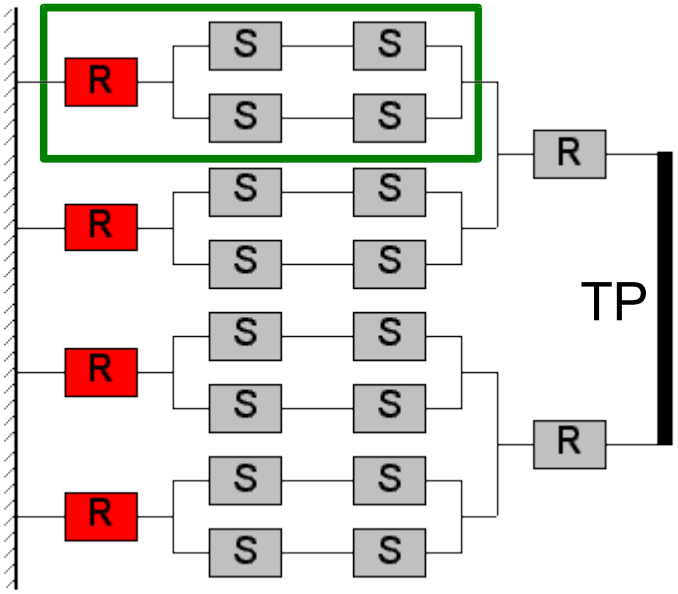

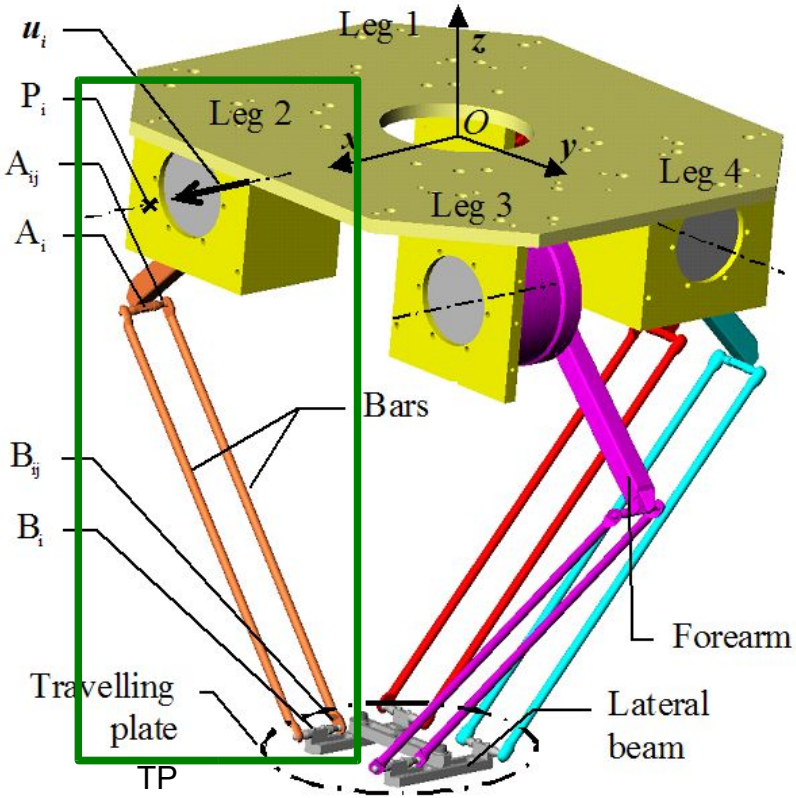

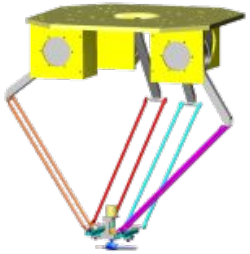

Articulated Travelling Plate

- An articulated Travelling Plate (TP)
- H-shaped
- End effector :
  - Connected to central bar : maximum rotation of +/- 45° around Z
  - Through a geared rotation amplifier (4:1 ratio) for 180° capability

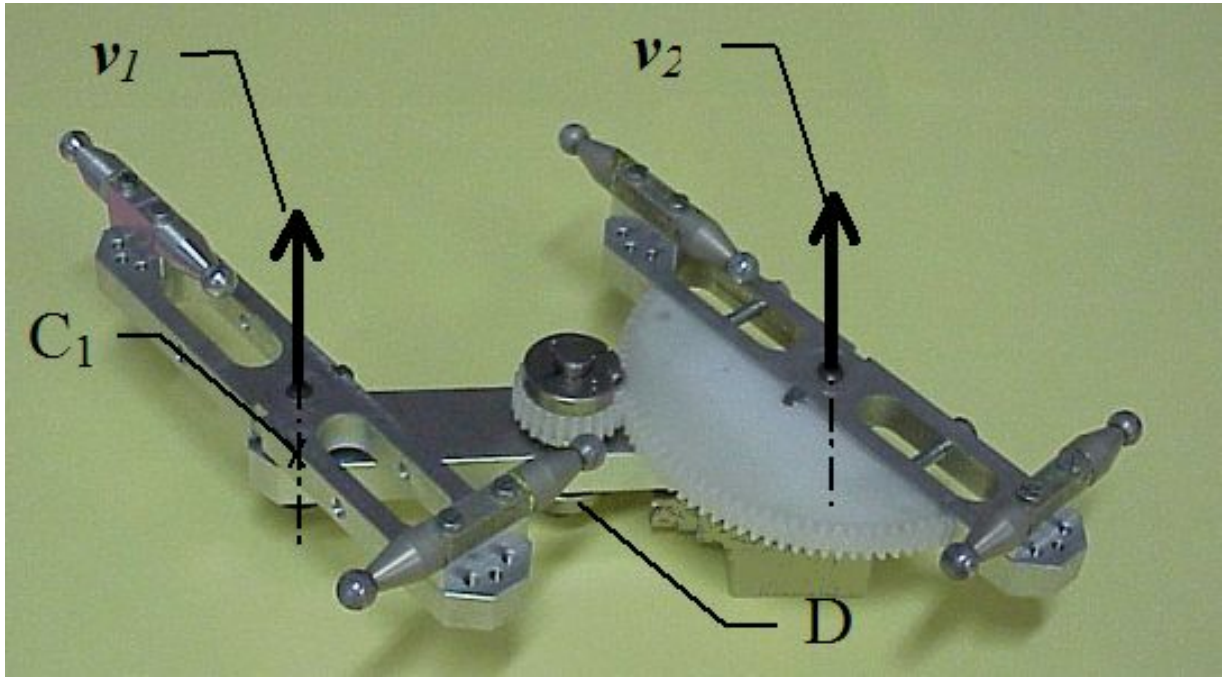

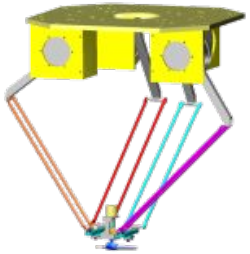

Measuring Displacements

- External force on TP
- From 10 to 50 N
- 3 displacements on TP
- 3 dial indicators
- No rotation measurements for the moment
- Only translational stiffness
- Actuators are powered
- TP position controlled
- Pose at 45°

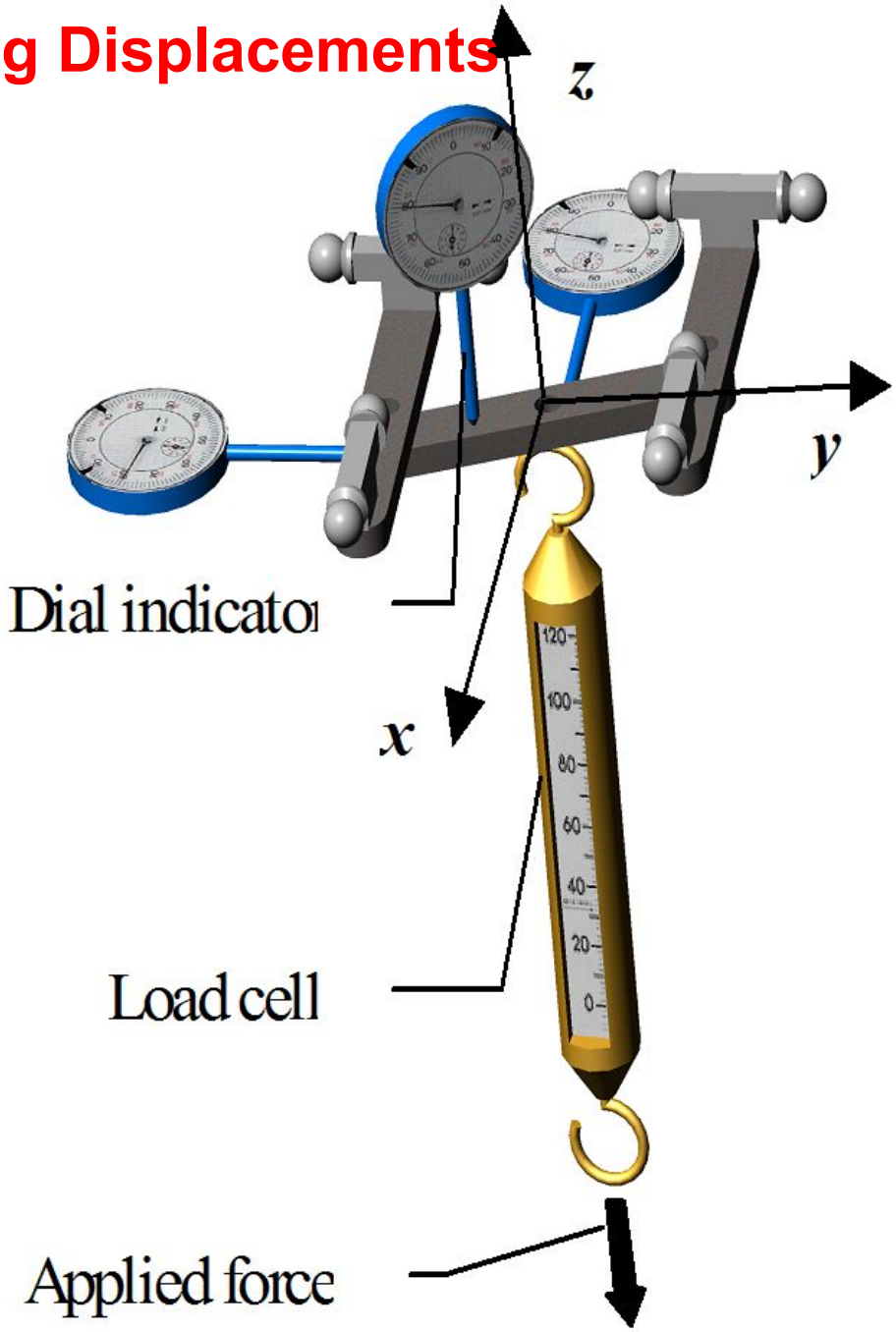

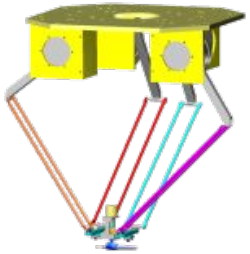

Experimenting

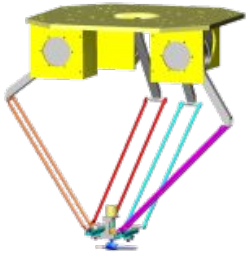

Measuring Material Properties

- Presentation
- Experimenting
  - Displacements
  - Experimenting
  - Material
- FEM Analysis
- Results
- Conclusion

- Bars from 3rd party provider, no specifications
- Need to evaluate stiffness for FEM study
- Specific fixtures

Part	Material	Elasticity modulus	Cross section (dimensions in mm)
Arm	Aluminium 2024 series	74 000 MPa	Square tube with round corners (Side 25, Thickness2.5, Ext radius 3, Int. Radius 1)
Bar	Carbon Epoxy	57 700 MPa	Round tube (External diameter 10.4, Thickness 2)

Fixture in two halves

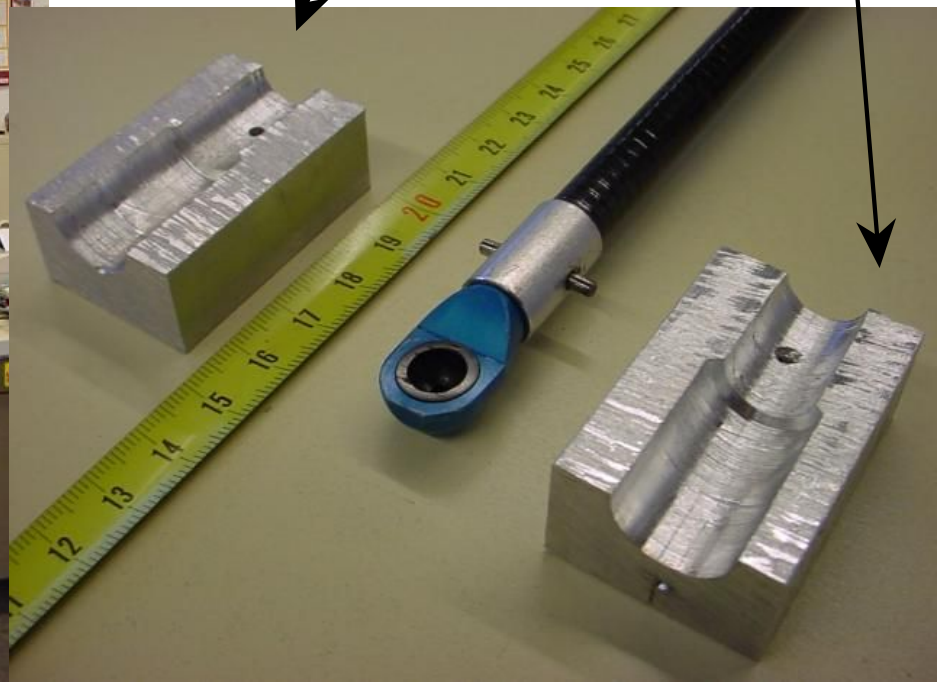

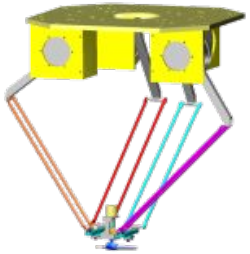

FEM Beam Model

- Simple beam model with constant cross section
- 1 element per beam
- 2 nodes per beam
- 3 displacements and 3 forces per node
- FEM = material strength theory in that case

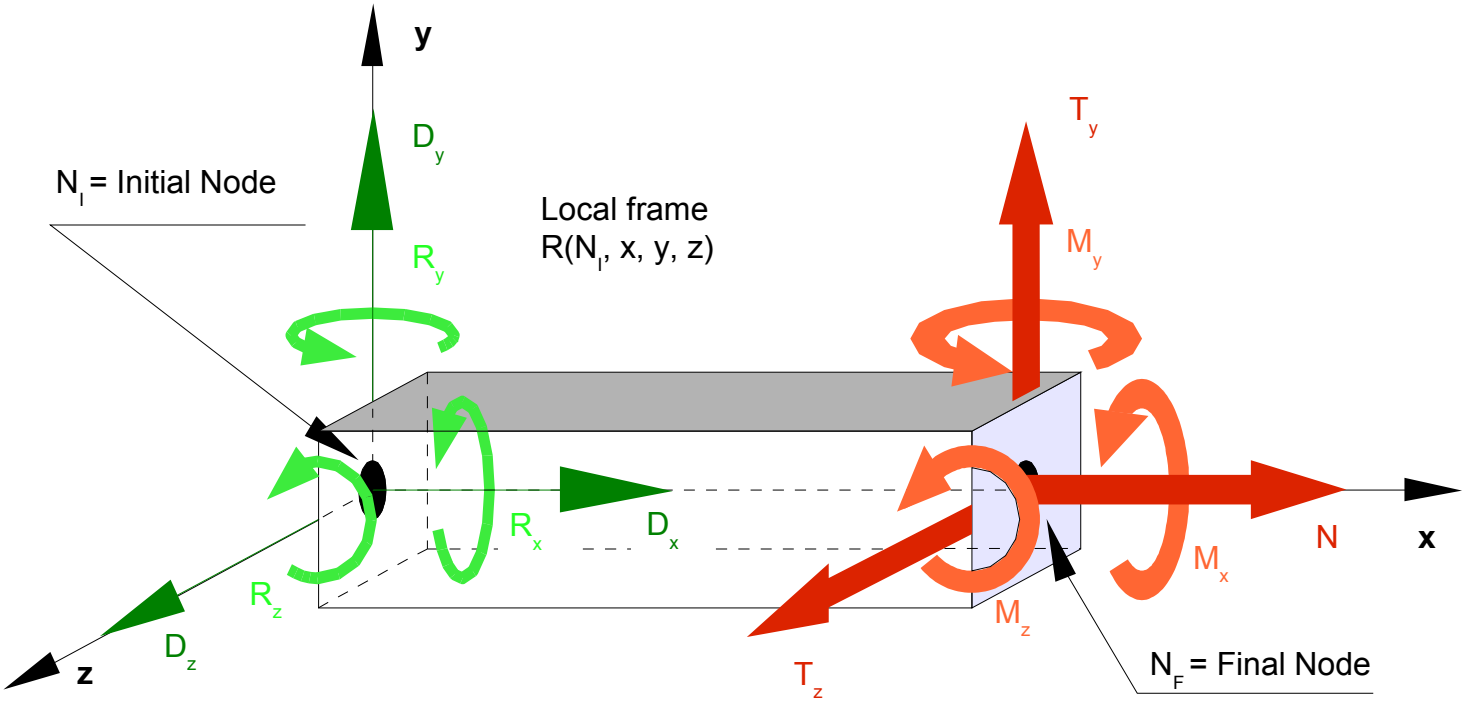

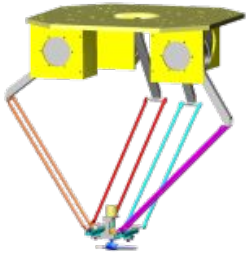

FEM Articulated H4 Model

- Presentation
- Experimenting
- FEM Analysis
  - Beam Model
  - H4 Model
- Results
- Conclusion

- Fast articulated model
- Displacement relaxations :
  - S joint : translations are the same on each beam but not rotations
  - R joint : all the movements are the same but not rotation around joint axis
- S – S links :
  - Beam becomes bar element with no self rotation around longitudinal axis for matrix inversion

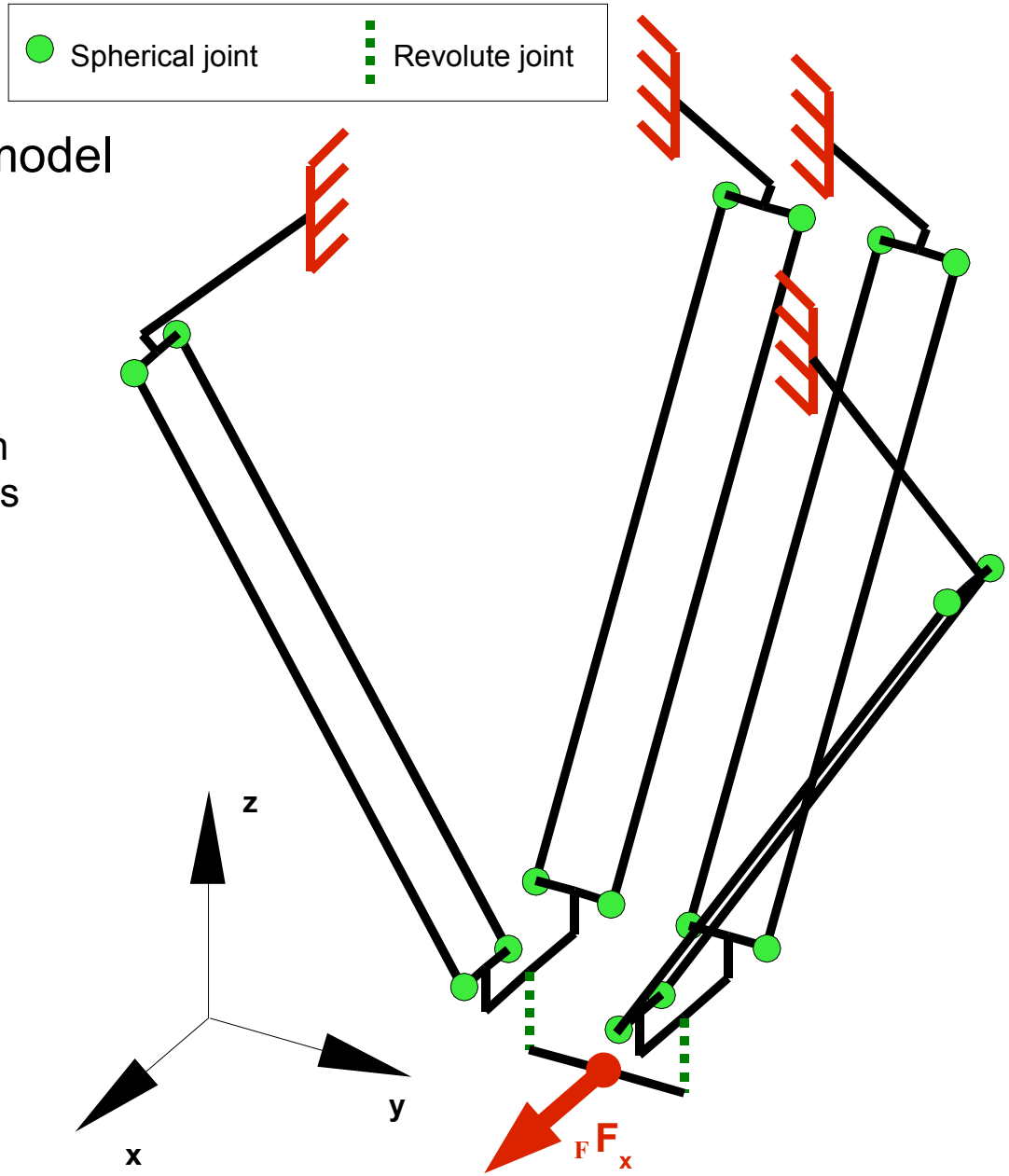

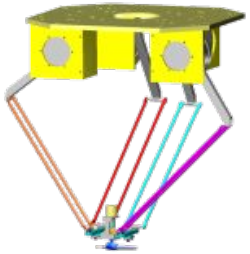

Force along X

- Presentation
- Experimenting
- FEM Analysis
- Results
  - Force on XYZ
  - Curves
  - Coupling
  - Stiffness
- Conclusion

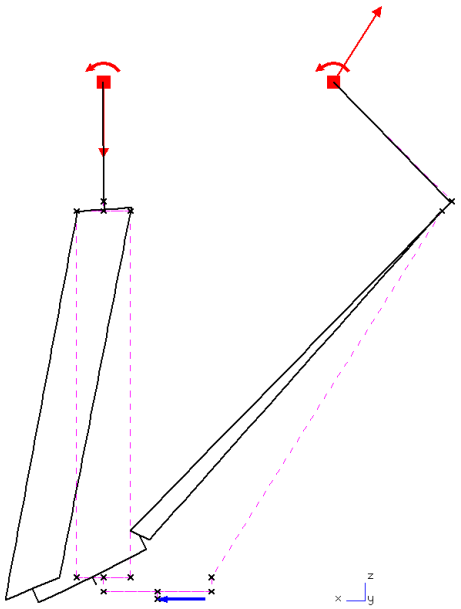

Y

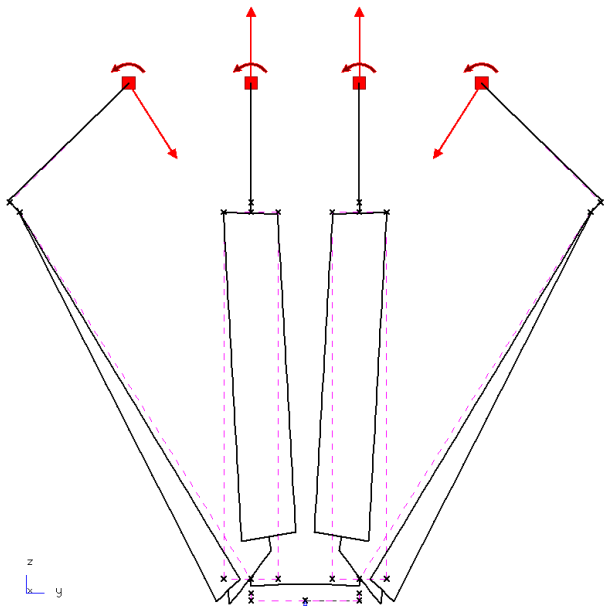

X

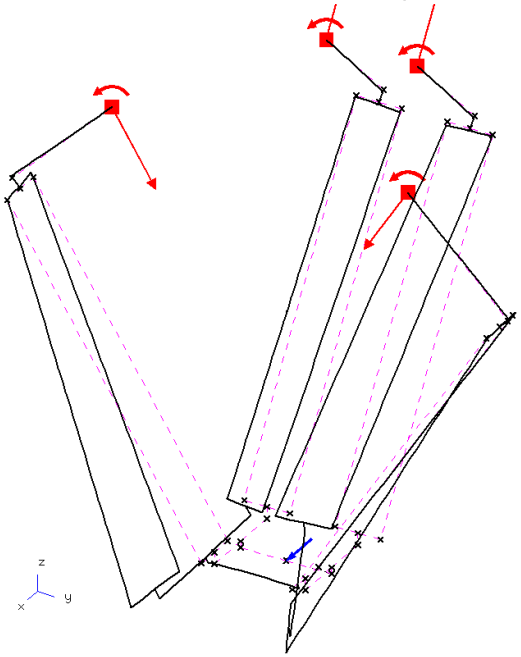

ISO

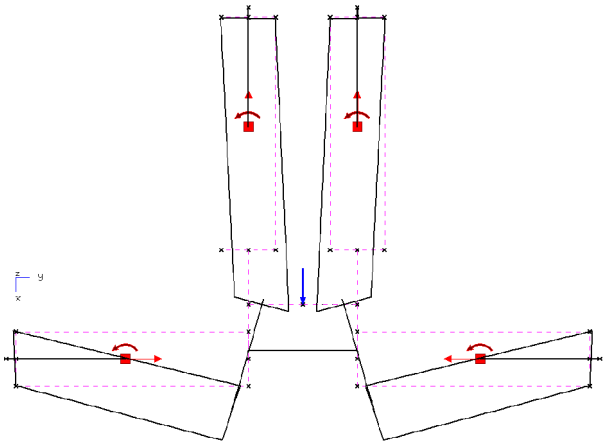

Z

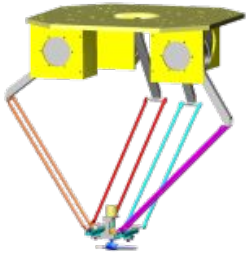

Force along Y

- Presentation
- Experimenting
- FEM Analysis
- Results
  - Force on XYZ
  - Curves
  - Coupling
  - Stiffness
- Conclusion

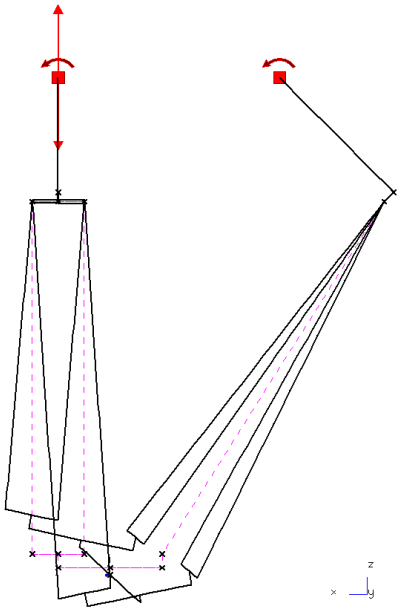

Y

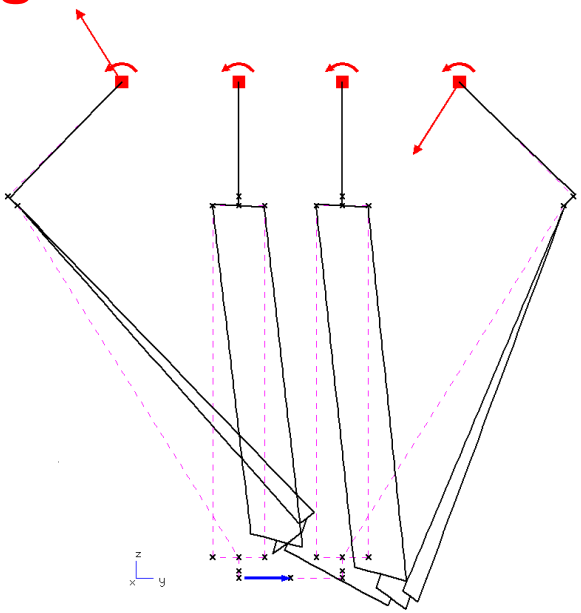

X

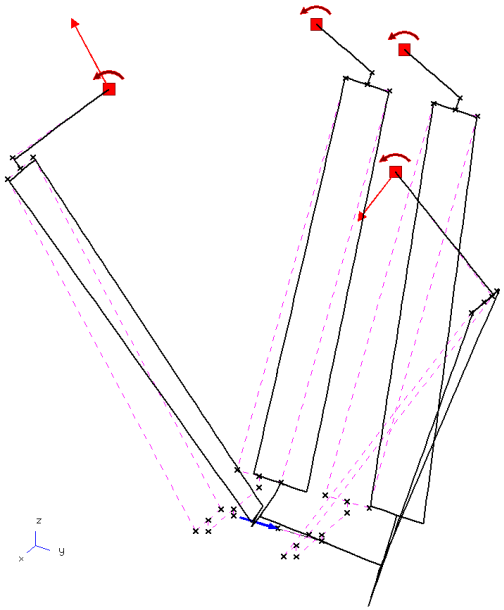

ISO

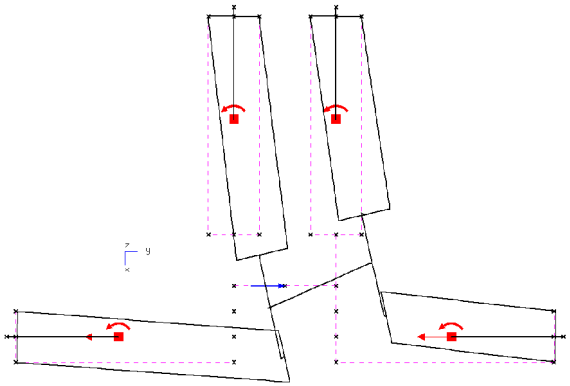

Z

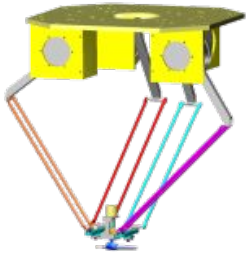

Force along Z

- Presentation
- Experimenting
- FEM Analysis
- Results
  - Force on XYZ
  - Curves
  - Coupling
  - Stiffness
- Conclusion

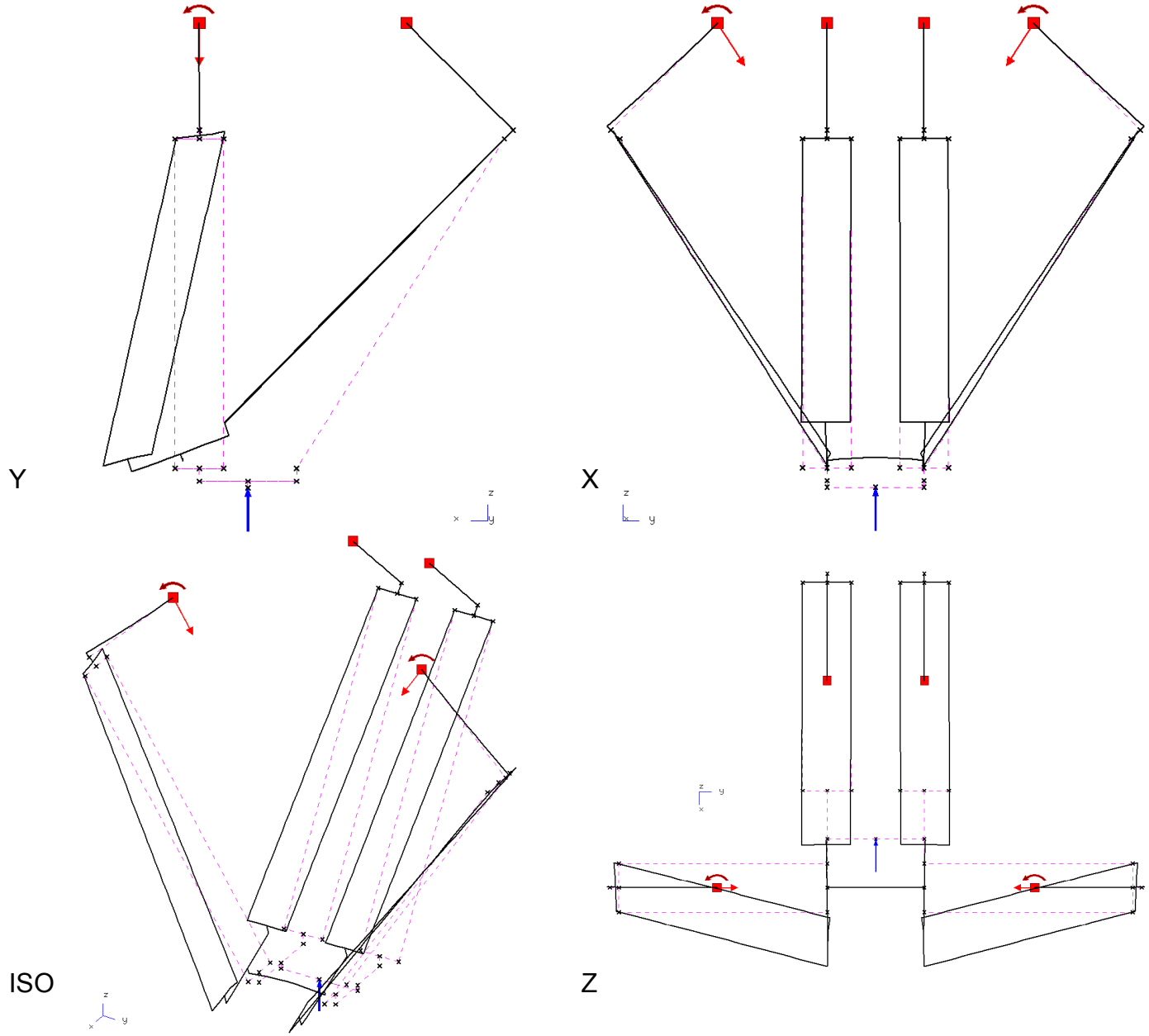

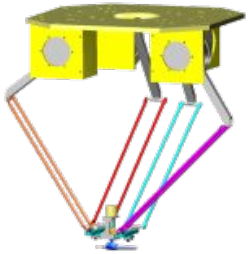

Comments on curves : shape

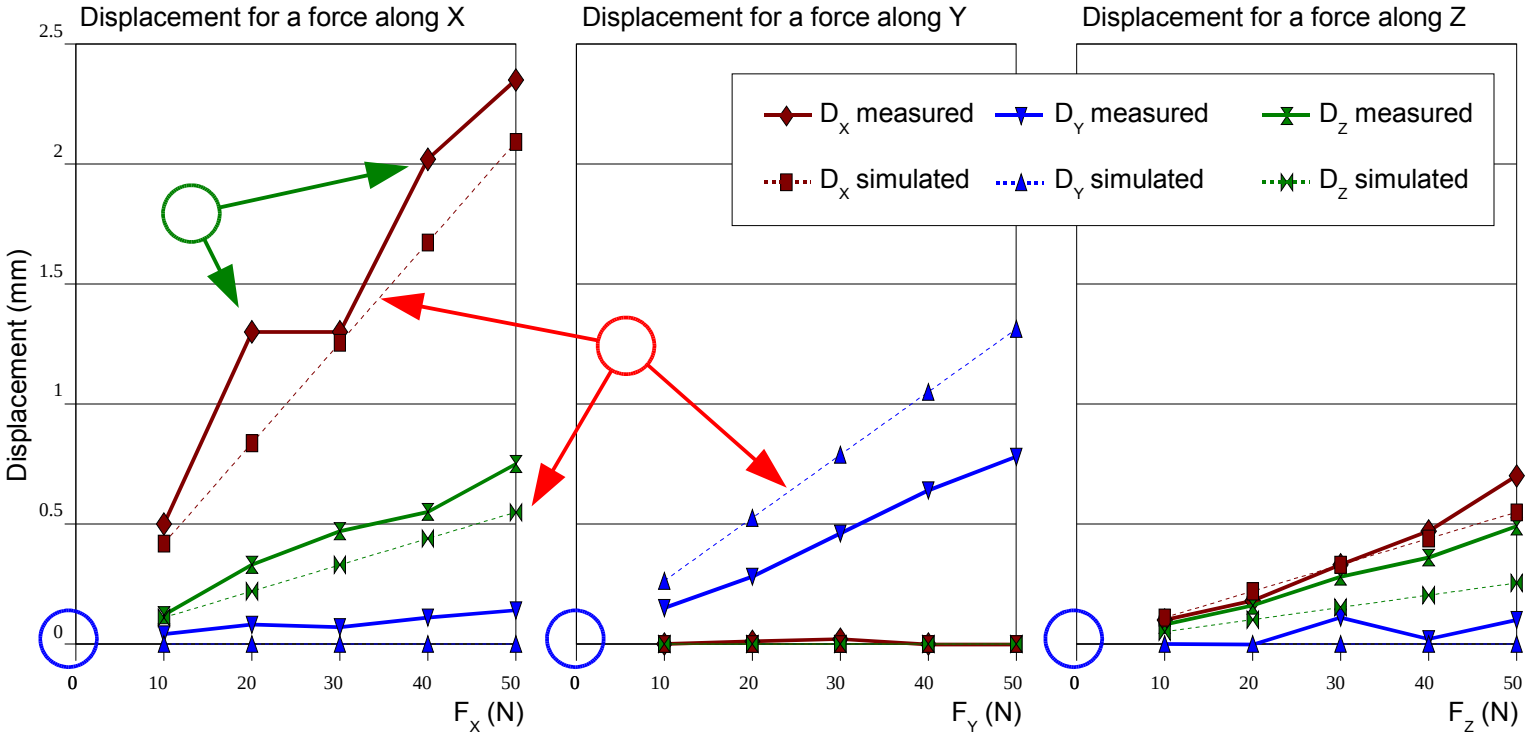

- Results are rather linear
  - FEM simulated results are perfectly linear
  - Measured results are rather linear (except experimental errors)
  - Curves start at origin

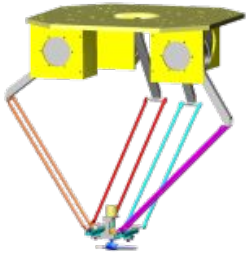

Comments on curves : relative positions

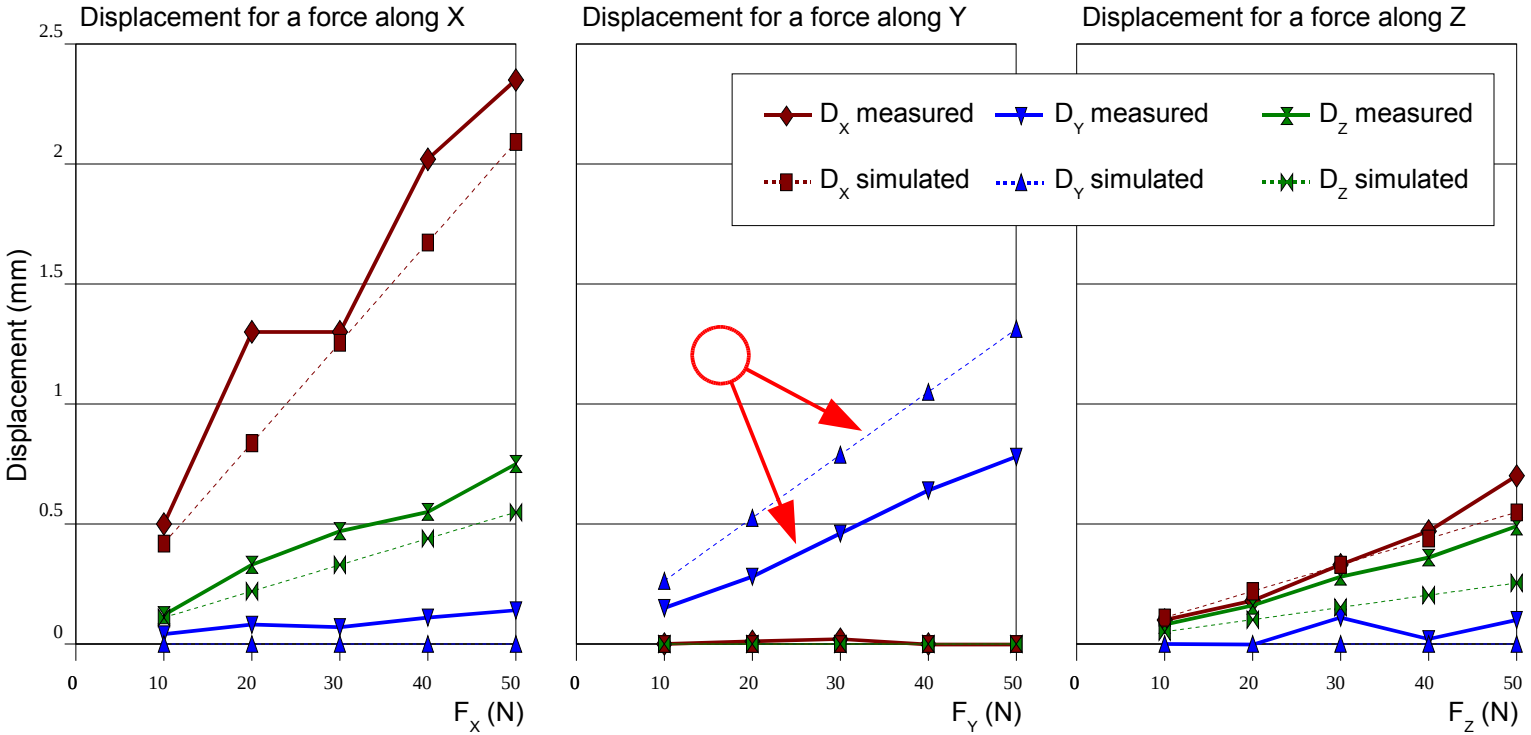

- FEM results are **under** experimental results but very close
  - Dotted lines ⋯⋯ are generally under plain lines ——
  - Justification : measurements include geometrical defaults, clearance, joint stiffness
  - An exception ○ : D_Y simulated = 2 x D_Y experiment
  - Justification : experimental error

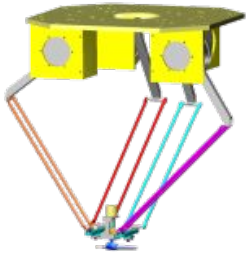

Comments on curves : coupling

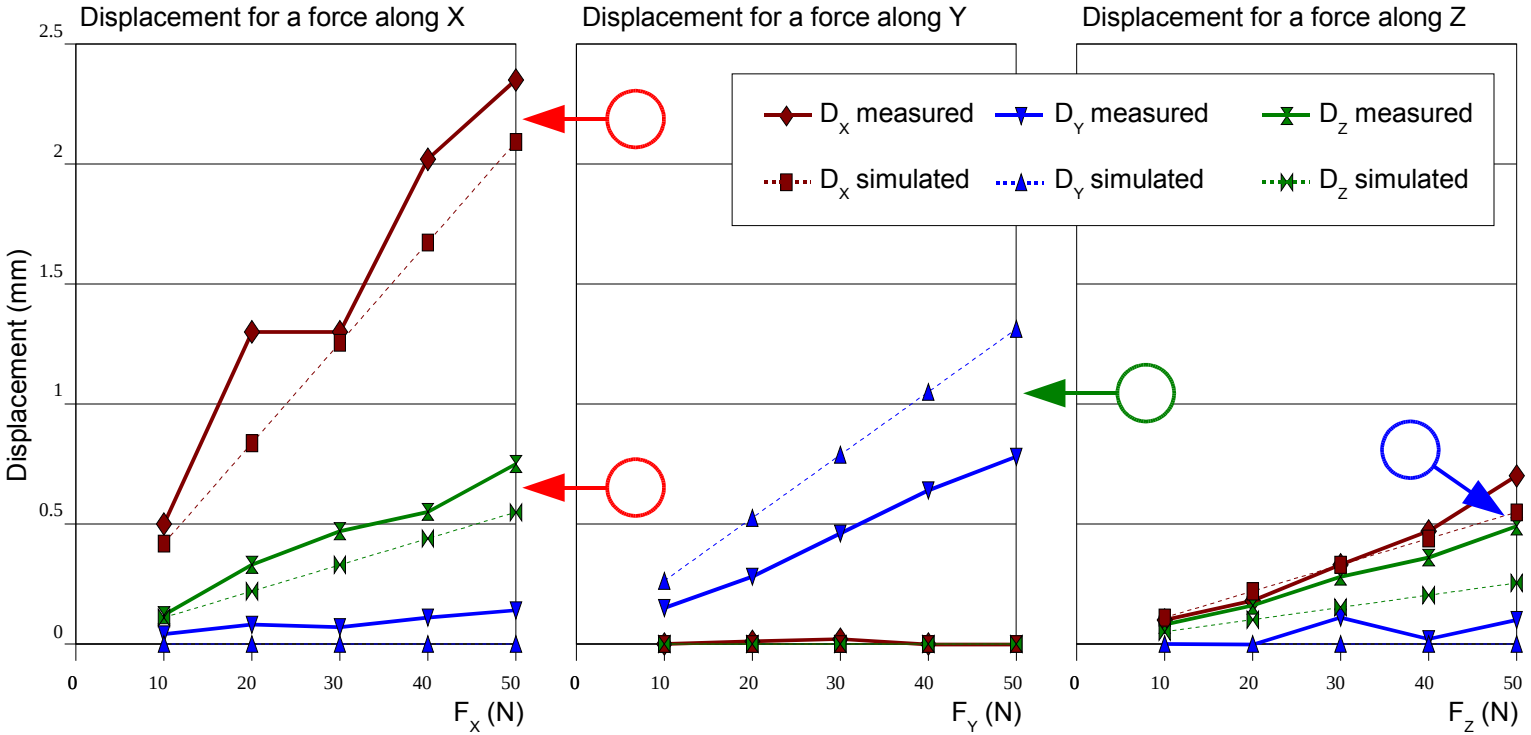

- **Coupling** : a force along one direction may generate a displacement along another direction
  - A force along **X** generates displacement along **X** and a bit on **Z**
  - A force along **Y** generates only displacement along **Y -> No coupling on Y**
  - A force along **Z** generates displacement mostly along **X**, then **Z**

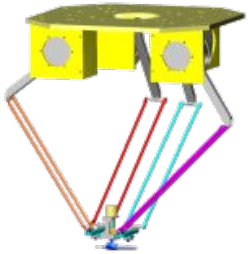

Understanding coupling

- Presentation
- Experimenting
- FEM Analysis
- Results
  - Force on XYZ
  - Curves
  - Coupling
  - Stiffness
- Conclusion

- With Fx, **coupling** between X and Z

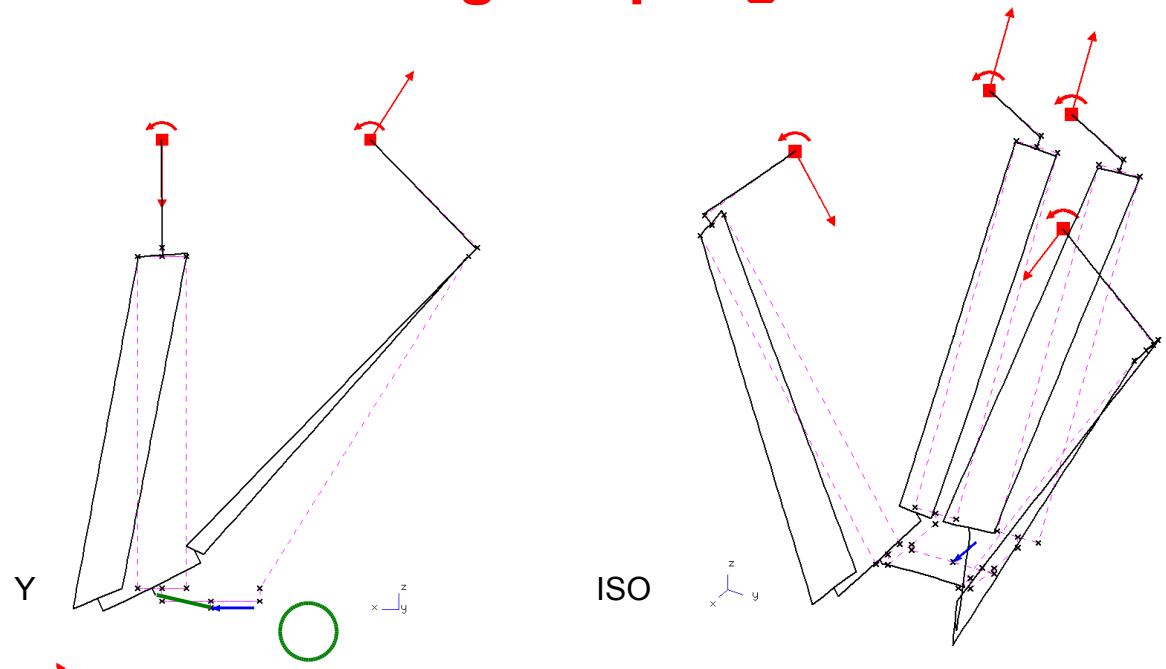

- With Fy, **no coupling**

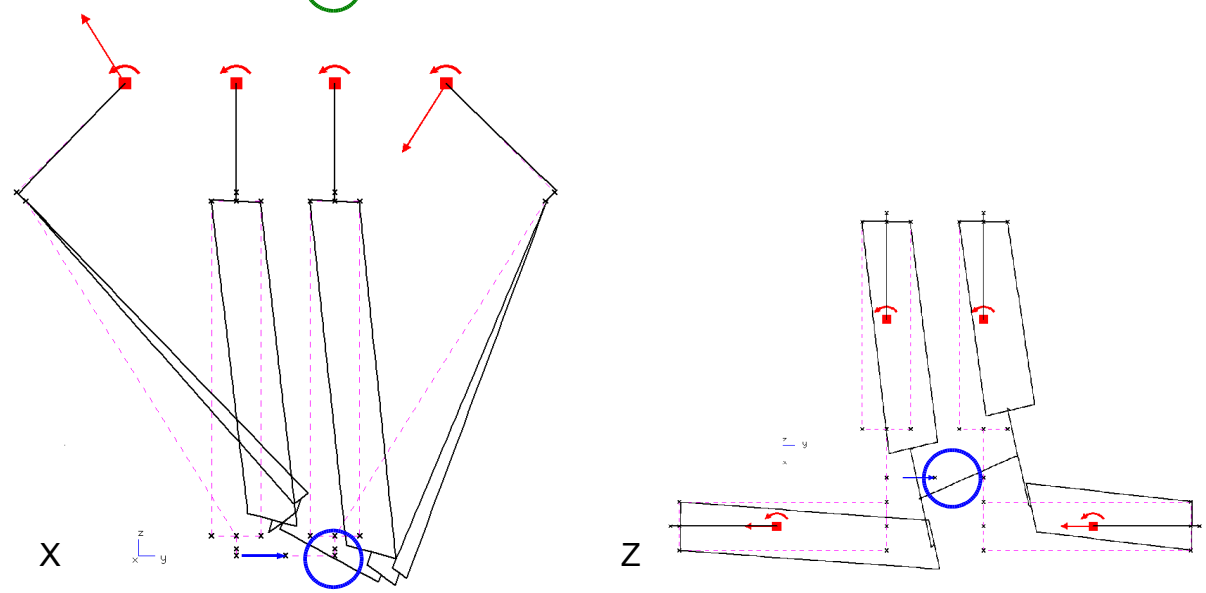

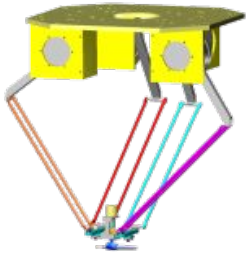

Compliance matrices

- Presentation
- Experimenting
- FEM Analysis
- Results
  - Force on XYZ
  - Curves
  - Coupling
  - Stiffness
- Conclusion

- One pose at 45°
- Experimental compliance matrix

	D_X	D_Y	D_Z
F_X	44	2	15
F_Y	0	16	0
F_Z	15	3	10

-

- FEM compliance matrix

	D_X	D_Y	D_Z
F_X	42	0	11
F_Y	0	26	0
F_Z	11	0	5

=

- Experimental -FEM : quite correct except one big difference

	D_X	D_Y	D_Z
F_X	2	2	4
F_Y	0	**-10**	0
F_Z	4	3	5

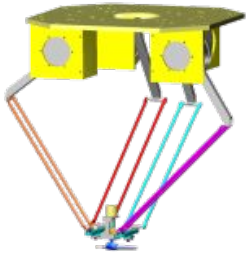

Conclusion

- Presentation
- Experimenting
- FEM Analysis
- Results
- Conclusion

- One pose at 45°, two methods for getting stiffness
- Experimental + FEM
- Results are in close agreement
- H4 has different stiffnesses on X Y Z
- Strong coupling between X and Z
- No coupling along Y

To be done...

- Stiffness maps
- Re-design for stiffness

Videos